General Specifications

EJA110E
Differential Pressure Transmitter

DPharp EJA™

GS 01C31B01-01EN

The high performance differential pressure transmitter EJA110E features single crystal silicon resonant sensor and is suitable to measure liquid, gas, or steam flow as well as liquid level, density and pressure. EJA110E outputs a 4 to 20 mA DC signal corresponding to the measured differential pressure. Its accurate and stable sensor can also measure the static pressure which can be shown on the integral indicator or remotely monitored via BRAIN or HART communications. Other key features include quick response, remote set-up using communications and self-diagnostics. FOUNDATION Fieldbus and PROFIBUS PA protocol types are also available. All EJA-E series models in their standard configuration, with the exception of the Fieldbus and PROFIBUS types, are certified as complying with SIL 2 for safety requirement.

■ STANDARD SPECIFICATIONS

Refer to GS 01C31T02-01EN for Fieldbus communication type and GS 01C31T04-01EN for PROFIBUS PA communication type for the items marked with "◊."

□ SPAN AND RANGE LIMITS

Measurement Span/Range		kPa	inH_2O (/D1)	mbar (/D3)	mmH_2O (/D4)
F*	Span	0.5 to 5	2.0 to 20	5 to 50	50 to 500
	Range	-5 to 5	-20 to 20	-50 to 50	-500 to 500
L*	Span	0.5 to 10	2.0 to 40	5 to 100	50 to 1000
	Range	-10 to 10	-40 to 40	-100 to 100	-1000 to 1000
M	Span	1 to 100	4 to 400	10 to 1000	100 to 10000
	Range	-100 to 100	-400 to 400	-1000 to 1000	-10000 to 10000
H	Span	5 to 500	20 to 2000	50 to 5000	0.05 to 5 kgf/cm^2
	Range	-500 to 500	-2000 to 2000	-5000 to 5000	-5 to 5 kgf/cm^2
V	Span	0.14 to 14 MPa	20 to 2000 psi	1.4 to 140 bar	1.4 to 140 kgf/cm^2
	Range	-0.5 to 14 MPa	-71 to 2000	-5 to 140 bar	-5 to 140 kgf/cm^2

*: F capsule is applicable for wetted parts material code S.
L capsule is applicable for wetted parts material code other than S.

□ PERFORMANCE SPECIFICATIONS

Zero-based calibrated span, linear output, wetted parts material code S and silicone oil, unless otherwise mentioned.
For Fieldbus and PROFIBUS PA communication types, use calibrated range instead of span in the following specifications.

Specification Conformance
EJA-E series ensures specification conformance to at least ±3σ.

Reference Accuracy of Calibrated Span
(includes terminal-based linearity, hysteresis, and repeatability)

Measurement span		F
Reference accuracy	X ≤ span	±0.055% of Span
	X > span	±(0.005+0.02 URL/span)% of Span
X		2 kPa (8 inH_2O)
URL (upper range limit)		5 kPa (20 inH_2O)

Measurement span		M
Reference accuracy	X ≤ span	±0.055% of Span
	X > span	±(0.005+0.0025 URL/span)% of Span
X		5 kPa (20 inH_2O)
URL (upper range limit)		100 kPa (400 inH_2O)

Measurement span		H
Reference accuracy	X ≤ span	±0.055% of Span
	X > span	±(0.005+0.01 URL/span)% of Span
X		100 kPa (400 inH_2O)
URL (upper range limit)		500 kPa (2000 inH_2O)

Measurement span		V
Reference accuracy	X ≤ span	±0.055% of Span
	X > span	±(0.005+0.005 URL/span)% of Span
X		1.4 MPa (200 psi)
URL (upper range limit)		14 MPa (2000 psi)

YOKOGAWA ◆
Yokogawa Electric Corporation
2-9-32, Nakacho, Musashino-shi, Tokyo, 180-8750 Japan
Tel.: 81-422-52-5690 Fax.: 81-422-52-2018

GS 01C31B01-01EN
©Copyright June 2012
4th Edition Apr. 2013

[When /HAC is specified]

Measurement span		M
Reference accuracy	X ≤ span	±0.04% of Span
	X > span	±(0.002+0.0019 URL/span)% of Span
X		5 kPa (20 inH2O)
URL (upper range limit)		100 kPa (400 inH2O)

Measurement span		H
Reference accuracy	X ≤ span	±0.04% of Span
	X > span	±(0.005+0.0049 URL/span)% of Span
X		70 kPa (280 inH2O)
URL (upper range limit)		500 kPa (2000 inH2O)

Measurement span		V
Reference accuracy	X ≤ span	±0.04% of Span
	X > span	±(0.005+0.0013 URL/span)% of Span
X		500 kPa (2000 inH2O)
URL (upper range limit)		14 MPa (2000 psi)

● Total Probable Error (M capsule)

±0.20% of Span @1:1 to 5:1 Rangedown
Total probable error, known as a measure of the total performance of the transmitters under the condition of fixed line presurre.

$$\text{Total Probable Error} = \pm\sqrt{E_1^2 + E_2^2 + E_3^2}$$

E1: Reference Accuracy of Calibrated Span
E2: Ambient Temperature Effects per 28°C change
E3: Static Span Effects per 6.9 MPa change

● Total Accuracy (M capsule)

±0.17% of Span @1:1 Rangedown
±0.33% of Span @ 5:1 Rangedown
Total accuracy is a comprehensive measure of transmitter total performance, covering all major factors in actual installation, that cause errors in measurement.

As a standard measure, YOKOGAWA uses this to evaluate transmitter performance.

$$\text{Total Accuracy} = \pm\sqrt{E_1^2 + E_2^2 + (E_3 + E_4)^2 + E_5^2}$$

E1: Reference Accuracy of Calibrated Span
E2: Ambient Temperature Effects per 28°C change
E3: Static Span Effects per 6.9 MPa change
E4: Static Zero Effects per 6.9 MPa change
E5: Overpressure Effects upto overpressure 16MPa

Not only a day-to-day changes in temperature can affect the measurement and lead to unnoticed errors; fluctuaion of line pressure, incorrect operation of three/five valve manifold leading to over-pressure events, and other phenomena can have the similar result. Total Accuracy factors in such changes and errors and provides much comprehensive and practical determination of how a transmitter will perform under actual plant operation.

Square Root Output Accuracy
The square root accuracy is a percent of flow span.

Output	Accuracy
50% or Greater	Same as reference accuracy
50% to Dropout point	$\frac{\text{Reference accuracy} \times 50}{\text{Square root output (\%)}}$

Ambient Temperature Effects per 28°C (50°F) Change

Capsule	Effect
F	±(0.08% Span + 0.18% URL)
M	±(0.07% Span + 0.02% URL)
H	±(0.07% Span + 0.015% URL)
V	±(0.07% Span + 0.03% URL)

Static Pressure Effects per 6.9 MPa (1000 psi) Change

Span Effects
F, M, H and V capsules
±0.1% of span

Effect on Zero

Capsule	Effect
F	±(0.04% span+0.208% URL)
M, H, V	±0.028% URL

Overpressure Effects
Overpressure condition: up to maximum working pressure
M, H and V capsules
±0.03% of URL

Stability (All normal operating condition, including overpressure effects)
M, H and V capsules
±0.1% of URL per 7 years

Power Supply Effects(Output signal code D and J)
±0.005 % per Volt (from 21.6 to 32 V DC, 350Ω)

Vibration Effects
Amplifier housing code 1 and 3:
Less than 0.1% of URL when tested per the requirements of IEC60770-1 field or pipeline with high vibration level (10-60 Hz, 0.21 mm peak to peak displacement/60-2000 Hz 3 g)
Amplifier housing code 2:
Less than ±0.1% of URL when tested per the requirements of IEC60770-1 field with general application or pipeline with low vibration level (10-60 Hz 0.15mm peak to peak displacement /60-500 Hz 2g)

Mounting Position Effects
Rotation in diaphragm plane has no effect. Tilting up to 90 degree will cause zero shift up to 0.4 kPa (1.6 inH2O) which can be corrected by the zero adjustment.

Response Time (Differential pressure) "◊"
90 ms for Wetted Parts material code S, except for Measurement span code F. 150 ms for Wetted Parts Material Code H, M, T, A, B and D or Measurement span code F.
When amplifier damping is set to zero and including dead time of 45 ms (nominal)

All Rights Reserved. Copyright © 2012, Yokogawa Electric Corporation

Static Pressure Signal Range and Accuracy (For monitoring via communication or on indicator. Includes terminal-based linearity, hysteresis, and repeatability)

Range

Upper Range Value and Lower Range Value of the static pressure can be set in the range between 0 and Maximum Working Pressure(MWP). The upper range value must be greater than the lower range value. Minimum setting span is 0.5 MPa(73 psi). Measuring either the pressure of high pressure side or low pressure side is user-selectable.

Accuracy

Absolute Pressure

1 MPa or higher: ±0.5% of span

Less than 1 MPa: ±0.5%×(1 MPa/span) of span

Gauge Pressure Reference

Gauge pressure reference is 1013 hPa (1 atm)

Note: Gauge pressure variable is based on the above fixed reference and thus subject to be affected by the change of atomospheric pressure.

□ FUNCTIONAL SPECIFICATIONS

Output "◊"

Two wire 4 to 20 mA DC output with digital communications, linear or square root programmable. BRAIN or HART FSK protocol are superimposed on the 4 to 20 mA signal.

Output range: 3.6 mA to 21.6 mA

Output limits conforming to NAMUR NE43 can be pre-set by option code C2 or C3.

Failure Alarm (Output signal code D and J)

Analog output status at CPU failure and hardware error;

Up-scale: 110%, 21.6 mA DC or more (standard)

Down-scale: −5%, 3.2 mA DC or less

Damping Time Constant (1st order)

Amplifier damping time constant is adjustable from 0.00 to 100.00 s by software and added to response time.

Note: For BRAIN protocol type, when amplifier software damping is set to less than 0.5 s, communication may occasionally be unavailble during the operation, especially while output changes dynamically. The default setting of damping ensures stable communication.

Update Period "◊"

Differential pressure: 45 ms

Static pressure: 360 ms

Zero Adjustment Limits

Zero can be fully elevated or suppressed, within the lower and upper range limits of the capsule.

External Zero Adjustment

External zero is continuously adjustable with 0.01% incremental resolution of span. Re-range can be done locally using the digital indicator with rangesetting switch.

Integral Indicator (LCD display, optional) "◊"

5-digit numerical display, 6-digit unit display and bar graph.

The indicator is configurable to display one or up to four of the following variables periodically.;

Measured differential pressure, differential pressure in %, scaled differential pressure, measured static pressure. See also "Factory Setting."

Burst Pressure Limits

69 MPa (10,000 psi) for wetted parts material S, except for Measurement span F.

47 MPa (6,800 psi) for wetted parts material other than S or Measurement span F.

Self Diagnostics

CPU failure, hardware failure, configuration error, and over-range error for differential pressure, static pressure and capsule temperature.

User-configurable process high/low alarm for differential pressure and static pressure is also available.

Signal Characterizer (Output signal code D and J)

User-configurable 10-segment signal characterizer for 4 to 20 mA output.

SIL Certification

EJA-E series transmitters except Fieldbus and PROFIBUS PA communication types are certified in compliance with the following standards;

IEC 61508: 2000; Part1 to Part 7

Functional Safety of Electrical/electronic/ programmable electronic related systems; SIL 2 capability for single transmitter use, SIL 3 capability for dual transmitter use.

□ NORMAL OPERATING CONDITION (Optional features or approval codes may affect limits.)

Ambient Temperature Limits

−40 to 85°C (−40 to 185°F)

−30 to 80°C (−22 to 176°F) with LCD display

Process Temperature Limits

−40 to 120°C (−40 to 248°F)

Ambient Humidity Limits

0 to 100% RH

Working Pressure Limits (Silicone oil)

Maximum Pressure Limits (MWP)

16 MPa (2300 psi)

25 MPa (3600 psi) for option code /HG

Minimum Pressure Limit

See graph below

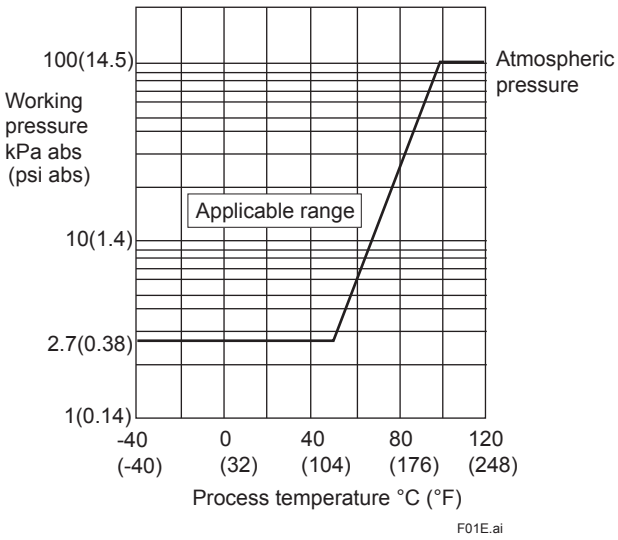

Figure 1. Working Pressure and Process Temperature

All Rights Reserved. Copyright © 2012, Yokogawa Electric Corporation

Supply & Load Requirements
(Output signal code D and J. Optional features or approval codes may affect electrical requirements.)
With 24 V DC supply, up to a 550Ω load can be used. See graph below.

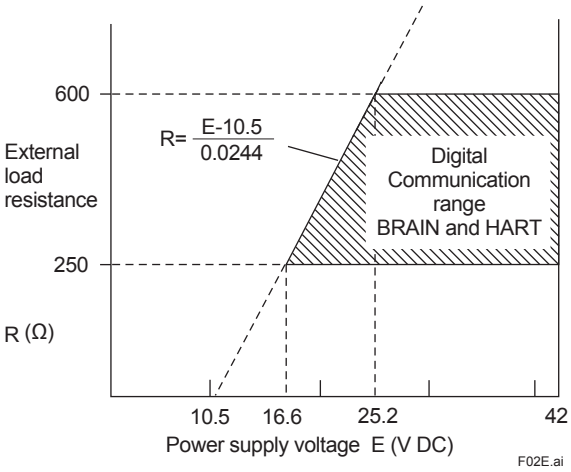

Figure 2. Relationship Between Power Supply Voltage and External Load Resistance

Supply Voltage "◊"
10.5 to 42 V DC for general use and flameproof type.
10.5 to 32 V DC for lightning protector (option code /A.)
10.5 to 30 V DC for intrinsically safe, type n, or nonincendive.
Minimum voltage limited at 16.6 V DC for digital communications, BRAIN and HART

Load (Output signal code D and J)
0 to 1290Ω for operation
250 to 600Ω for digital communication

Communication Requirements "◊"
(Approval codes may affect electrical requirements.)

BRAIN

Communication Distance
Up to 2 km (1.25 miles) when using CEV polyethylene-insulated PVC-sheathed cables. Communication distance varies depending on type of cable used.

Load Capacitance
0.22 μF or less

Load Inductance
3.3 mH or less

Input Impedance of communicating device
10 kΩ or more at 2.4 kHz.

EMC Conformity Standards CE , N200
EN61326-1 Class A, Table2 (For use in industrial locations)
EN61326-2-3
EN61326-2-5 (for PROFIBUS only)

European Pressure Equipment Directive 97/23/EC
Sound Engineering Practice (for all capsules)

With option code /PE3 and /HG (for M, H and V capsules and wetted parts material code S.)

CE 0038
Category III, Module H, Type of Equipment: Pressure Accessory-Vessel, Type of Fluid: Liquid and Gas, Group of Fluid: 1 and 2

Safety Requirement Standards
EN61010-1
- Altitude of installation site: Max. 2,000 m above sea level
- Installation category: I
- Pollution degree: 2
- Indoor/Outdoor use

□ PHYSICAL SPECIFICATIONS

Wetted Parts Materials

Diaphragm, Cover Flange, Process Connector, Capsule Gasket, and Vent/Drain Plug
Refer to "MODEL AND SUFFIX CODES."

Process Connector Gasket
PTFE Teflon
Fluorinated rubber for option code N2 and N3

Non-wetted Parts Materials

Bolting
B7 carbon steel, 316L SST or 660 SST

Housing
Low copper cast aluminum alloy with polyurethane, deep sea moss green paint (Munsell 0.6GY3.1/2.0 or its equivalent), or ASTM CF-8M Stainless Steel

Degrees of Protection
IP66/IP67, NEMA TYPE 4X

Cover O-rings
Buna-N, fluoro-rubber (optional)

Name plate and tag
316 SST

Fill Fluid
Silicone, fluorinated oil (optional)

Weight
[Installation code 7, 8 and 9]
2.8 kg (6.2 lb) for measurement span code M, H and V, wetted parts material code S without integral indicator, mounting bracket, and process connector.
3.7 kg (8.2 lb) for measurement span code F without integral indicator, mounting bracket, and process connector.
Add 1.5 kg (3.3lb) for Amplifier housing code 2.

Connections
Refer to "MODEL AND SUFFIX CODES."
Process connection of cover flange: IEC61518

< Related Instruments>
Power Distributor: Refer to GS 01B04T01-02E or GS 01B04T02-02E
BRAIN TERMINAL: Refer to GS 01C00A11-00E

< Reference >
- DPharp EJA, FieldMate; Trademarks of Yokogawa Electric Corporation.
- Teflon; Trademark of E.I. DuPont de Nemours & Co.
- Hastelloy; Trademark of Haynes International Inc.
- HART; Trademark of the HART Communication Foundation.
- FOUNDATION Fieldbus; Tradmark of Fieldbus Foundation.
- PROFIBUS; Registered trademark of Profibus Nutzerorganisation e.v., Karlsruhe, Germany.

Other company names and product names used in this material are registered trademarks or trademarks of their respective owners.

All Rights Reserved. Copyright © 2012, Yokogawa Electric Corporation

■ MODEL AND SUFFIX CODES

Model	Suffix Codes	Description
EJA110E	. . . . .	Differential pressure transmitter
Output signal	**-D**	4 to 20 mA DC with digital communication (BRAIN protocol)
	-J	4 to 20 mA DC with digital communication (HART 5/HART 7 protocol)*1
	-F	Digital communication (FOUNDATION Fieldbus protocol, refer to GS 01C31T02-01EN)
	-G	Digital communication (PROFIBUS PA protocol, refer to GS 01C31T04-01EN)
Measurement span (capsule)	**F**	0.5 to 5 kPa (2.0 to 20 inH_2O) (For Wetted parts material code S)
	L	0.5 to 10 kPa (2.0 to 40 inH_2O) (For Wetted parts material code M, H, T, A, D and B)
	M	1 to 100 kPa (4 to 400 inH_2O)
	H	5 to 500 kPa (20 to 2000 inH_2O)
	V	0.14 to 14 MPa (20 to 2000 psi)
Wetted parts material *2	☐	Refer to "Wetted Parts Material" Table.
Process connections	**0**	without process connector (Rc1/4 female on the cover flanges)
	1	with Rc1/4 female process connector
	2	with Rc1/2 female process connector
	3	with 1/4 NPT female process connector
	4	with 1/2 NPT female process connector
	▶ **5**	without process connector (1/4 NPT female on the cover flanges)
Bolts and nuts materia	**J**	B7 carbon steel
	G	316L SST
	C	660 SST
Installation	**-7**	Vertical piping, left side high pressure, and process connection downside
	-8	Horizontal piping and right side high pressure
	▶ **-9**	Horizontal piping and left side high pressure
	-B	Bottom Process Connection, left side high pressure*3*4
	-U	Universal flange*3
Amplifier housing	**1**	Cast aluminum alloy
	3	Cast aluminum alloy with corrosion resistance properties*5
	2	ASTM CF-8M stainless steel*6
Electrical connection	**0**	G1/2 female, one electrical connection without blind plugs
	▶ **2**	1/2 NPT female, two electrical connections without blind plugs
	4	M20 female, two electrical connections without blind plugs
	5	G1/2 female, two electrical connections and a blind plug*7
	7	1/2 NPT female, two electrical connections and a blind plug*7
	9	M20 female, two electrical connections and a blind plug*7
	A	G1/2 female, two electrical connections and a SUS316 blind plug
	C	1/2 NPT female, two electrical connections and a SUS316 blind plug
	D	M20 female, two electrical connections and a SUS316 blind plug
Integral indicator	**D**	Digital indicator*8
	E	Digital indicator with the range setting switch*9
	▶ **N**	None
Mounting bracket	▶ **B**	304 SST 2-inch pipe mounting, flat type (for horizontal piping)
	D	304 SST 2-inch pipe mounting, L type (for vertical piping)
	J	316 SST 2-inch pipe mounting, flat type (for horizontal piping)
	K	316 SST 2-inch pipe mounting, L type (for vertical piping)
	M	316 SST 2-inch pipe mounting (for bottom process connection type)
	N	None
Optional Codes		☐/ Optional specification

The "▶" marks indicate the most typical selection for each specification.

*1: HART 5 or HART 7 is selectable. Specify upon ordering.

*2: ⚠ Users must consider the characteristics of selected wetted parts material and the influence of process fluids. The use of inappropriate materials can result in the leakage of corrosive process fluids and cause injury to personnel and/or damage to plant facilities. It is also possible that the diaphragm itself can be damaged and that material from the broken diaphragm and the fill fluid can contaminate the user's process fluids.
Be very careful with highly corrosive process fluids such as hydrochloric acid, sulfuric acid, hydrogen sulfide, sodium hypochlorite, and high-temperature steam (150°C [302°F] or above). Contact Yokogawa for detailed information of the wetted parts material.

*3: Only applicable for Wetted parts material code S.

*4: Not applicable for measurement span code F.

*5: Not applicable for electrical connection code 0, 5, 7, 9 and A. Content rate of copper in the material is 0.03% or less and content rate of iron is 0.15% or less.

*6: Not applicable for electrical connection code 0, 5, 7 and 9.

*7: Material of a blind plug is aluminum alloy or 304 SST.

*8: Not applicable for output signal code G.

*9: Not applicable for output signal code F.

All Rights Reserved. Copyright © 2012, Yokogawa Electric Corporation

Table. Wetted Parts Materials

Wetted parts material code	Cover flange and process connector	Capsule	Capsule gasket	Drain/Vent plug
S #	ASTM CF-8M *1	Hastelloy C-276 *2 (Diaphragm) F316L SST, 316L SST (Others)	Teflon-coated 316L SST	316 SST
H #	ASTM CF-8M *1	Hastelloy C-276 *2	PTFE Teflon	316 SST
M #	ASTM CF-8M *1	Monel	PTFE Teflon	316 SST
T	ASTM CF-8M *1	Tantalum	PTFE Teflon	316 SST
A #	Hastelloy C-276 equivalent *3	Hastelloy C-276 *2	PTFE Teflon	Hastelloy C-276 *2
D #	Hastelloy C-276 equivalent *3	Tantalum	PTFE Teflon	Hastelloy C-276 *2
B #	Monel equivalent *4	Monel	PTFE Teflon	Monel

*1: Cast version of 316 SST. Equivalent to SCS14A.
*2: Hastelloy C-276 or ASTM N10276.
*3: Indicated material is equivalent to ASTM CW-12MW.
*4: Indicated material is equivalent to ASTM M35-2.
The '#'marks indicate the construction materials conform to NACE material recommendations per MR0175/ISO15156.
Please refer to the latest standards for details. Selected materials also conform to NACE MR0103.

■ OPTIONAL SPECIFICATIONS (For Explosion Protected type) "◊"

Item	Description	Code
Factory Mutual (FM)	FM Explosionproof Approval *1 *3 Applicable Standard: FM3600, FM3615, FM3810, ANSI/NEMA 250 Explosionproof for Class I, Division 1, Groups B, C and D, Dust-ignitionproof for Class II/III, Division 1, Groups E, F and G, in Hazardous locations, indoors and outdoors (NEMA TYPE 4X) "FACTORY SEALED, CONDUIT SEAL NOT REQUIRED." Temperature class: T6, Amb. Temp.: –40 to 60°C (–40 to 140°F)	**FF1**
	FM Intrinsically safe Approval *1 *3 Applicable Standard: FM3600, FM3610, FM3611, FM3810 Intrinsically Safe for Class I, Division 1, Groups A, B, C & D, Class II, Division 1, Groups E, F & G and Class III, Division 1, Class I, Zone 0, in Hazardous Locations, AEx ia IIC Nonincendive for Class I, Division 2, Groups A, B, C & D, Class II, Division. 2, Groups F & G, Class I, Zone 2, Group IIC, in Hazardous Locations Enclosure: "NEMA TYPE 4X", Temp. Class: T4, Amb. Temp.: –60 to 60°C (–75 to 140°F) Intrinsically Safe Apparatus Parameters [Groups A, B, C, D, E, F and G] Vmax=30 V, Imax=200 mA, Pmax=1 W, Ci=6 nF, Li=0 μH [Groups C, D, E, F and G] Vmax=30 V, Imax=225 mA, Pmax=1 W, Ci=6 nF, Li=0 μH	**FS1**
	Combined FF1 and FS1 *1 *3	**FU1**
ATEX	ATEX Flameproof Approval *1 Applicable Standard: EN 60079-0:2009, EN 60079-1:2007, EN 60079-31:2009 Certificate: KEMA 07ATEX0109 X II 2G, 2D Ex d IIC T6...T4 Gb, Ex tb IIIC T85°C Db IP6X Degree of protection: IP66/IP67 Amb. Temp. (Tamb) for gas-proof : T4; –50 to 75°C (–58 to 167°F), T5; –50 to 80°C (–58 to 176°F), T6; –50 to 75°C (–58 to 167°F) Max. process Temp. for gas-proof (Tp): T4; 120°C (248°F), T5; 100°C (212°F), T6; 85°C (185°F) Max. surface Temp. for dust-proof: T85°C (Tamb: –30 to 75°C, Tp: 85°C) *2	**KF22**
	ATEX Intrinsically safe Approval *1 Applicable Standard: EN 60079-0:2009, EN 60079-11:2007, EN 60079:2012, EN 60079-26:2007, EN 61241-11:2006 Certificate: DEKRA 11ATEX0228 X II 1G, 2D Ex ia IIC T4 Ga, Ex ia IIIC T85°C T100°C T120°C Db Degree of protection: IP66/IP67 Amb. Temp. (Tamb) for EPL Ga: –50 to 60°C (–58 to 140°F) Maximum Process Temp. (Tp) for EPL Ga:120°C Electrical data: Ui=30 V, Ii=200 mA, Pi=0.9 W, Ci=27.6 nF, Li=0 μH Amb. Temp. for EPL Db: –30 to 60°C *2 Max. surface Temp. for EPL Db: T85°C (Tp: 80°C), T100°C (Tp: 100°C), T120°C (Tp: 120°C)	**KS21**
	Combined KF22, KS21 and ATEX Intrinsically safe Ex ic *1 [ATEX Intrinsically safe Ex ic] Applicable Standard: EN 60079-0:2009, EN 60079-0:2012, EN 60079-11:2012 II 3G Ex ic IIC T4 Gc, Amb. Temp.: –30 to 60°C (–22 to 140°F) *2 Ui=30 V, Ci=27.6 nF, Li=0 μH	**KU22**

All Rights Reserved. Copyright © 2012, Yokogawa Electric Corporation

Item	Description	Code
Canadian Standards Association (CSA)	CSA Explosionproof Approval *1 Certificate: 2014354 Applicable Standard: C22.2 No.0, C22.2 No.0.4, C22.2 No.0.5, C22.2 No.25, C22.2 No.30, C22.2 No.94, C22.2 No.60079-0, C22.2 No.60079-1, C22.2 No.61010-1 Explosion-proof for Class I, Groups B, C and D. Dustignition-proof for Class II/III, Groups E, F and G. When installed in Division 2, “SEAL NOT REQUIRED” Enclosure: NEMA TYPE 4X, Temp. Code: T6...T4 Ex d IIC T6...T4 Enclosure: IP66/IP67 Max.Process Temp.: T4;120°C(248°F), T5;100°C(212°F), T6; 85°C(185°F) Amb.Temp.: –50 to 75°C(–58 to 167°F) for T4, –50 to 80°C(–58 to 176°F) for T5, –50 to 75°C(–58 to 167°F) for T6 *2 Process Sealing Certification Dual Seal Certified by CSA to the requirement of ANSI/ISA 12.27.01 No additional sealing required Primary seal failure annunciation: at the zero adjustment screw	**CF1**
	CSA Intrinsically safe Approval *1 Certificate: 1606623 [For CSA C22.2] Applicable Standard: C22.2 No.0, C22.2 No.0.4, C22.2 No.25, C22.2 No.94, C22.2 No.157, C22.2 No.213, C22.2 No.61010-1, C22.2 No.60079-0 Intrinsically Safe for Class I, Division 1, Groups A, B, C & D, Class II, Division 1, Groups E, F & G, Class III, Division 1, Nonincendive for Class I, Division 2, Groups A, B, C & D, Class II, Division 2, Groups F & G, Class III, Division 1 Enclosure: NEMA TYPE 4X, Temp. Code: T4 Amb. Temp.: –50 to 60°C(–58 to 140°F) *2 Electrical Parameters: [Intrinsically Safe] Vmax=30V, Imax=200mA, Pmax=0.9W, Ci=10nF, Li=0 μH [Nonincendive] Vmax=30V, Ci=10nF, Li=0 μH [For CSA E60079] Applicable Standard: CAN/CSA E60079-11, CAN/CSA E60079-15, IEC 60529:2001 Ex ia IIC T4, Ex nL IIC T4 Enclosure: IP66/IP67 Amb. Temp.: –50 to 60°C(–58 to 140°F) *2, Max. Process Temp.: 120°C(248°F) Electrical Parameters: [Ex ia] Ui=30V, Ii=200mA, Pi=0.9W, Ci=10nF, Li=0 μH [Ex nL] Ui=30V, Ci=10nF, Li=0 μH Process Sealing Certification Dual Seal Certified by CSA to the requirement of ANSI/ISA 12.27.01 No additional sealing required Primary seal failure annunciation: at the zero adjustment screw	**CS1**
	Combined CF1 and CS1 *1	**CU1**
IECEx	IECEx Flameproof Approval *1 Applicable Standard: IEC 60079-0:2004, IEC60079-1:2003 Certificate: IECEx CSA 07.0008 Flameproof for Zone 1, Ex d IIC T6...T4 Enclosure: IP66/IP67 Max.Process Temp.: T4;120°C(248°F), T5;100°C(212°F), T6; 85°C(185°F) Amb.Temp.: –50 to 75°C(–58 to 167°F) for T4, –50 to 80°C(–58 to 176°F) for T5, –50 to 75°C(–58 to 167°F) for T6	**SF2**

*1: Applicable for Electrical connection code 2, 4, 7, 9, C and D.
*2: Lower limit of ambient temperature is –15°C (5°F) when option code HE is specified.
*3: Not applicable for option code HG.

All Rights Reserved. Copyright © 2012, Yokogawa Electric Corporation

■ OPTIONAL SPECIFICATIONS

Item		Description		Code
High accuracy type [*1]		High accuracy		**HAC**
High pressure-proof structure		Maximum working pressure for differential pressure measurement: 25MPa [*18]		**HG**
Painting	Color change	Amplifier cover only[*2]		**P□**
		Amplifier cover and terminal cover, Munsell 7.5 R4/14		**PR**
	Coating change	Anti-corrosion coating[*2*3]		**X2**
316 SST exterior parts		316 SST zero-adjustment screw and setscrews[*4]		**HC**
Fluoro-rubber O-ring		All O-rings of amplifier housing. Lower limit of ambient temperature: –15°C (5°F)		**HE**
Lightning protector		Transmitter power supply voltage: 10.5 to 32 V DC (10.5 to 30 V DC for intrinsically safe type.) Allowable current: Max. 6000 A (1×40 μs), Repeating 1000 A (1×40 μs) 100 times Applicable Standards: IEC 61000-4-4, IEC 61000-4-5		**A**
Oil-prohibited use[*5]		Degrease cleansing treatment		**K1**
		Degrease cleansing treatment and fluorinated oilfilled capsule. Operating temperature −20 to 80°C (−4 to 176°F)		**K2**
Oil-prohibited use with dehydrating treatment[*5]		Degrease cleansing and dehydrating treatment		**K5**
		Degrease cleansing and dehydrating treatment with fluorinated oilfilled capsule. Operating temperature −20 to 80°C (−4 to 176°F)		**K6**
Capsule fill fluid		Fluorinated oil filled in capsule Operating temperature −20 to 80°C (−4 to 176°F)		**K3**
Calibration units[*6]		P calibration (psi unit)	(See Table for Span and Range Limits.)	**D1**
		bar calibration (bar unit)		**D3**
		M calibration (kgf/cm^2 unit)		**D4**
Long vent[*7]		Total length: 119 mm (standard: 34 mm); Total length when combining with option code K1, K2, K5, and K6: 130 mm. Material: 316 SST		**U1**
Gold-plated capsule gasket [*8]		Gold-plated 316L SST capsule gasket. Without drain and vent plugs.		**GS**
Gold-plated diaphragm [*9]		Surface of isolating diaphragms are gold plated, effective for hydrogen permeation. Overpressure effects for M, H and V capsules: ±0.06% of URL		**A1**
Output limits and failure operation[*10]		Failure alarm down-scale: Output status at CPU failure and hardware error is −5%, 3.2mA DC or less.		**C1**
		NAMUR NE43 Compliant Output signal limits: 3.8 mA to 20.5 mA	Failure alarm down-scale: Output status at CPU failure and hardware error is −5%, 3.2 mA DC or less.	**C2**
			Failure alarm up-scale: Output status at CPU failure and hardware error is 110%, 21.6 mA or more.	**C3**
Body option[*11] 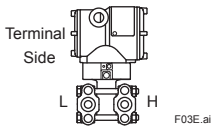 		Right side high pressure, without drain and vent plugs		**N1**
		N1 and Process connection, based on IEC61518 with female thread on both sides of cover flange, with blind kidney flanges on back.		**N2**
		N2, and Material certificate for cover flange, diaphragm, capsule body, and blind kidney flange		**N3**
Wired tag plate		316 SST tag plate wired onto transmitter		**N4**
Data configuration at factory[*12]		Data configuration for HART communication type	Software damping, Descriptor, Message	**CA**
		Data configuration for BRAIN communication type	Software damping	**CB**
European Pressure Equipment Directive[*19]		PED 97/23/EC Category III, Module H, Type of Equipment: Pressure Accessory-Vessel, Type of Fluid: Liquid and Gas, Group of Fluid: 1 and 2 Lower limit of ambient and process temperature: −29°C		**PE3**
Material certificate[*13]		Cover flange [*14]		**M01**
		Cover flange, Process connector [*15]		**M11**
Pressure test/ Leak test certificate[*16]		Test Pressure: 16 MPa(2300 psi)	Nitrogen(N_2) Gas[*17] Retention time: one minute	**T12**
		Test Pressure: 25 MPa(3600 psi) for option code HG		**T13**

All Rights Reserved. Copyright © 2012, Yokogawa Electric Corporation

*1: Applicable for capsule code M, H and V when combined with wetted parts material code S.
*2: Not applicable for amplifier housing code 2 and 3.
*3: Not applicable with color change option.
*4: 316 or 316L SST. The specification is included in amplifier housing code 2.
*5: Applicable for Wetted parts material code S, M, H and T.
*6: The unit of MWP (Max. working pressure) on the name plate of a housing is the same unit as specified by option codes D1, D3, and D4.
*7: Applicable for vertical impulse piping type (Installation code 7) and Wetted parts material code S, H, M and T.
*8: Applicable for wetted parts material code S; process connection code 0 and 5; and installation code 8 and 9. Not applicable for option code U1, N2, N3 and M11. No PTFE is used for wetted parts.
*9: Applicable for wetted parts material code S.
*10: Applicable for output signal codes D and J. The hardware error indicates faulty amplifier or capsule.
*11: Applicable for wetted parts material code S, M, H and T; process connection codes 3, 4, and 5; installation code 9; and mounting bracket code N. Process connection faces on the other side of zero adjustment screw.
*12: Also see ‘Ordering Information’.
*13: Material traceability certification, per EN 10204 3.1B.
*14: Applicable for process connections codes 0 and 5.
*15: Applicable for process connections codes 1, 2, 3, and 4.
*16: The unit on the certificate is always Pa unit regardless of selection of option code D1, D3 or D4.
*17: Pure nitrogen gas is used for oil-prohibited use (option codes K1, K2, K5, and K6).
*18: Applicable for Measurement span code M, H, and V; and wetted parts material code S. The URL of static pressure range is also extended to 25 MPa.
*19: Applicable for measurement span code M, H and V and wetted parts material code S. If compliance with category III is needed, specify this option code with HG.

All Rights Reserved. Copyright © 2012, Yokogawa Electric Corporation

■ DIMENSIONS

Unit: mm (approx.inch)

● Vertical Impulse Piping Type (INSTALLATION CODE '7')

Wetted Parts Material code: S (except for Measurement Span code F)

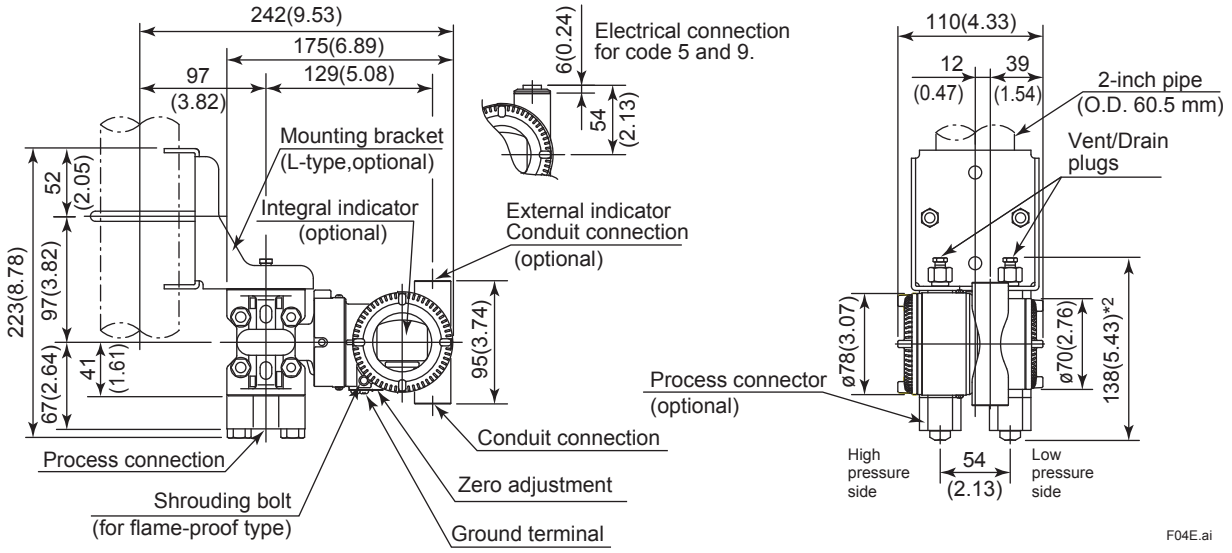

● Horizontal Impulse Piping Type (INSTALLATION CODE '9')
(For CODE '8', refer to the notes below.)

Wetted Parts Material code: S (except for Measurement Span code F)

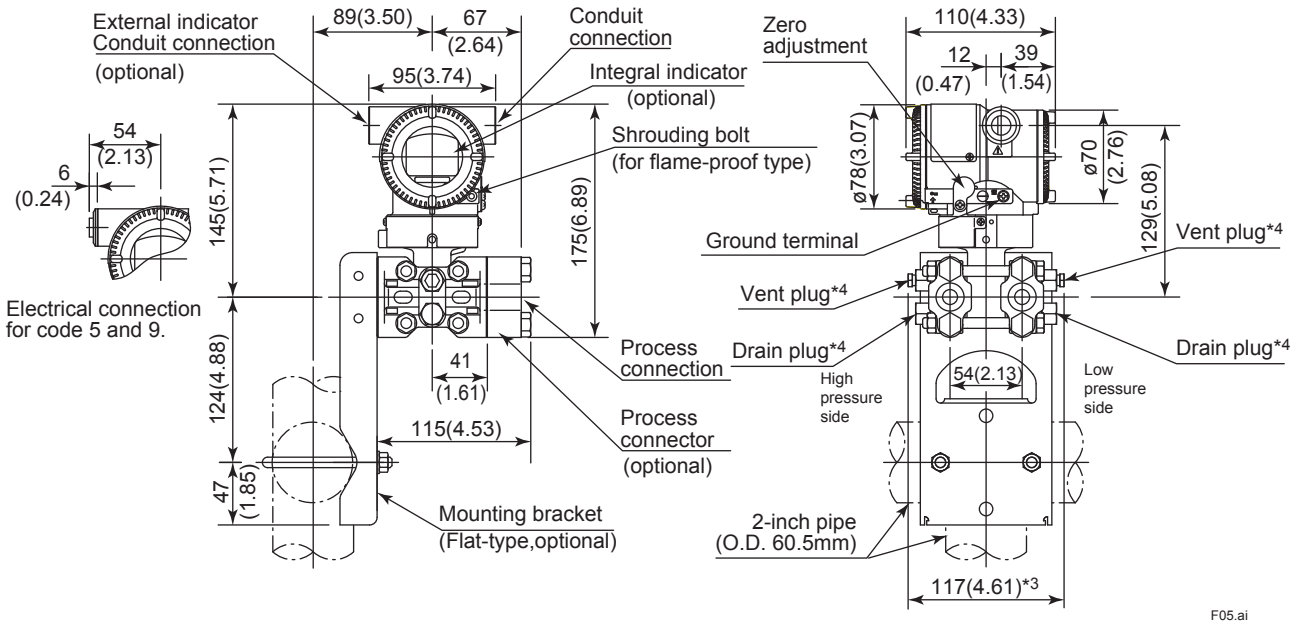

*1: When installation code 8 is selected, high and low pressure side on above figure are reversed. (i.e. High pressure side is on the right side.)
*2: When option code K1, K2, K5 or K6 is selected, add 15 mm (0.59 inch) to the value in the figure.
*3: When option code K1, K2, K5 or K6 is selected, add 30 mm (1.18 inch) to the value in the figure.
*4: Not available when option code GS is selected.

All Rights Reserved. Copyright © 2012, Yokogawa Electric Corporation

Unit: mm (approx.inch)

● Vertical Impulse Piping Type (INSTALLATION CODE '7')

Wetted Parts Material code: H, M, T, A, B and D or Measurement Span code F

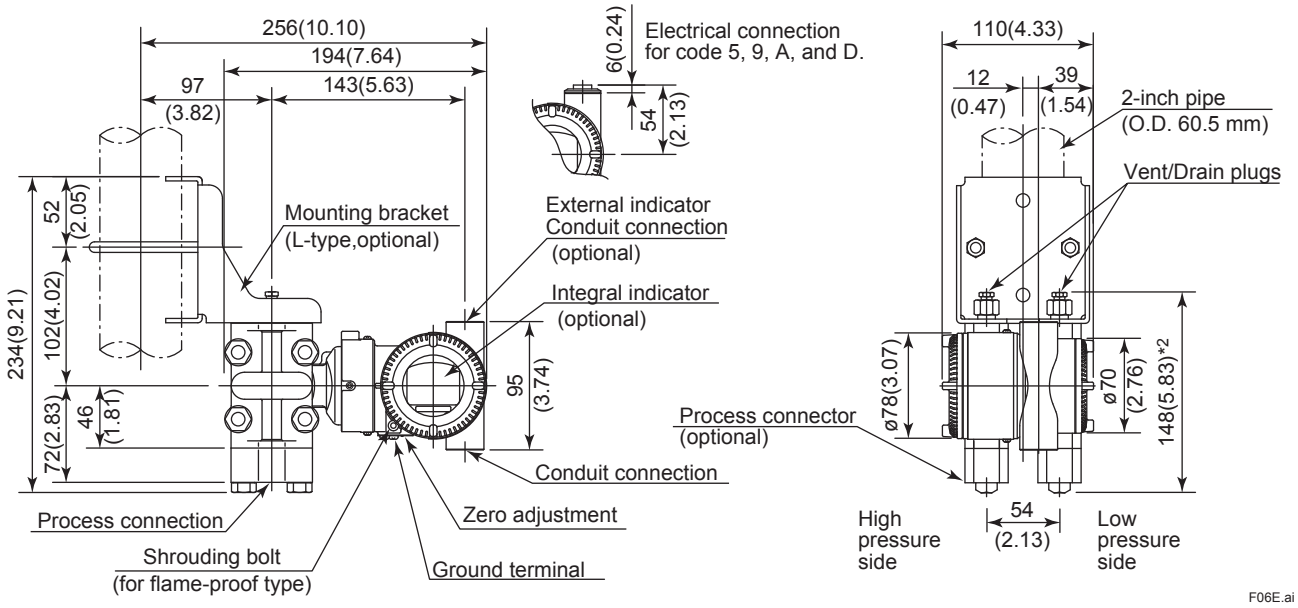

● Horizontal Impulse Piping Type (INSTALLATION CODE '9')
(For CODE '8', refer to the notes below.)

Wetted Parts Material code: H, M, T, A, B and D or Measurement Span code F

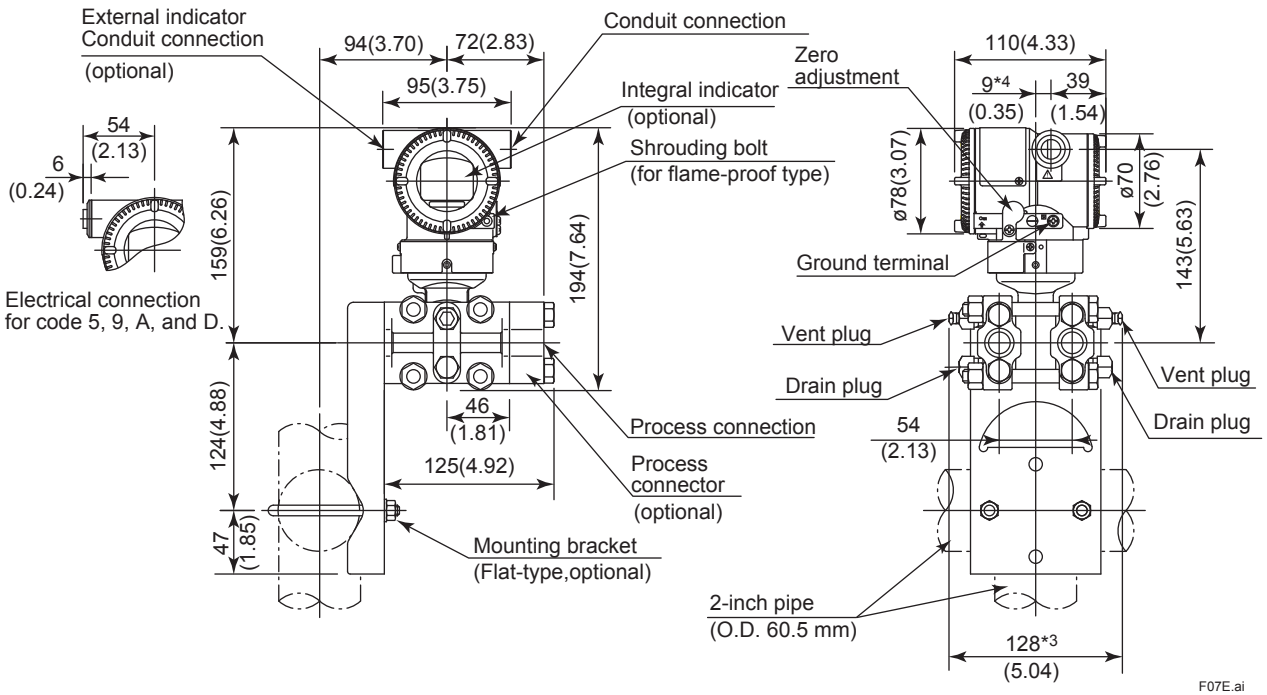

*1: When Installation code 8 is selected, high and low pressure side on above figure are reversed. (i.e. High pressure side is on the right side.)
*2: When Option code K1, K2, K5, or K6 is selected, add 15 mm (0.59 inch) to the value in the figure.
*3: When Option code K1, K2, K5, or K6 is selected, add 30 mm (1.18 inch) to the value in the figure.
*4: 15 mm (0.59 inch) for right side high pressure.

All Rights Reserved. Copyright © 2012, Yokogawa Electric Corporation

Unit: mm (approx.inch)

● Universal Flange (INSTALLATION CODE 'U')

Measurement Span code M, H and V

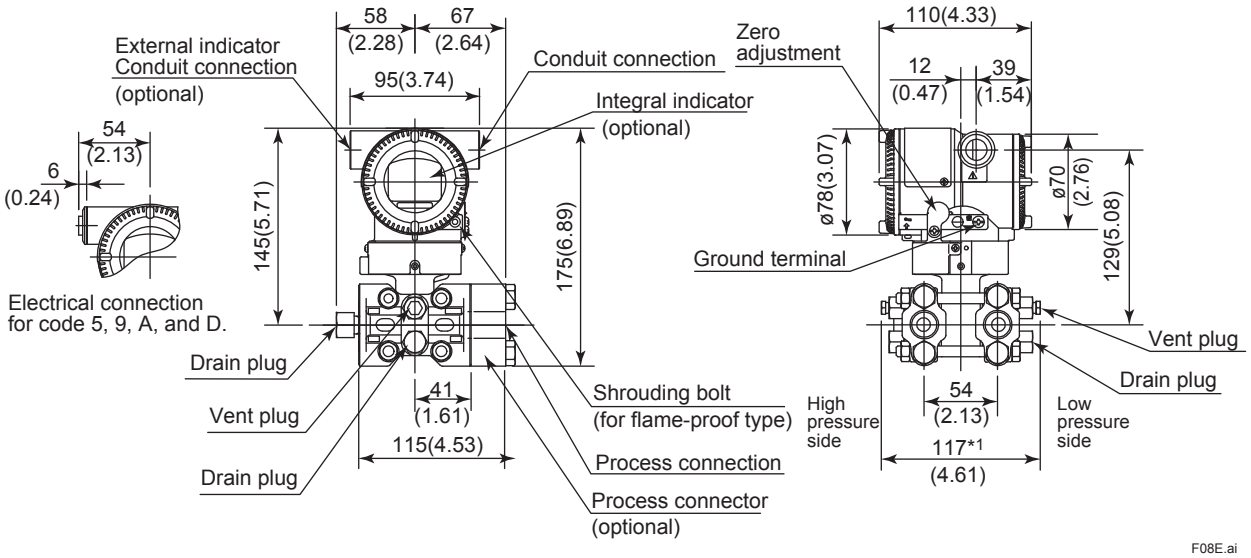

*1: When Option code K1, K2, K5, or K6 is selected, add 30 mm (1.18 inch) to the value.

● Universal Flange (INSTALLATION CODE 'U')

Measurement Span code F

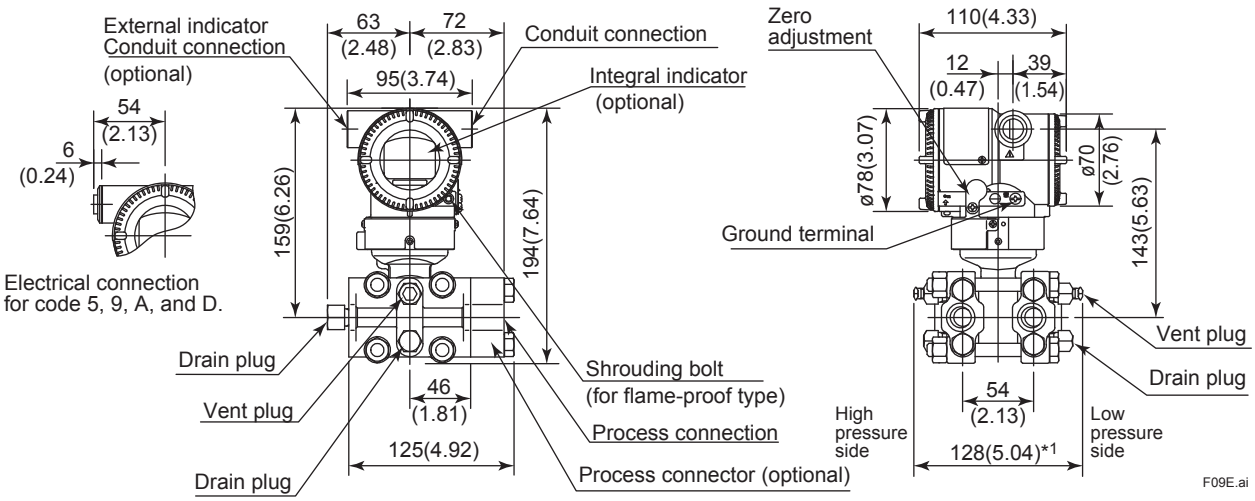

*1: When Option code K1, K2, K5, or K6 is selected, add 30 mm (1.18 inch) to the value.

All Rights Reserved. Copyright © 2012, Yokogawa Electric Corporation

Unit: mm (approx.inch)

● Bottom Process Connection Type (INSTALLATION CODE 'B')

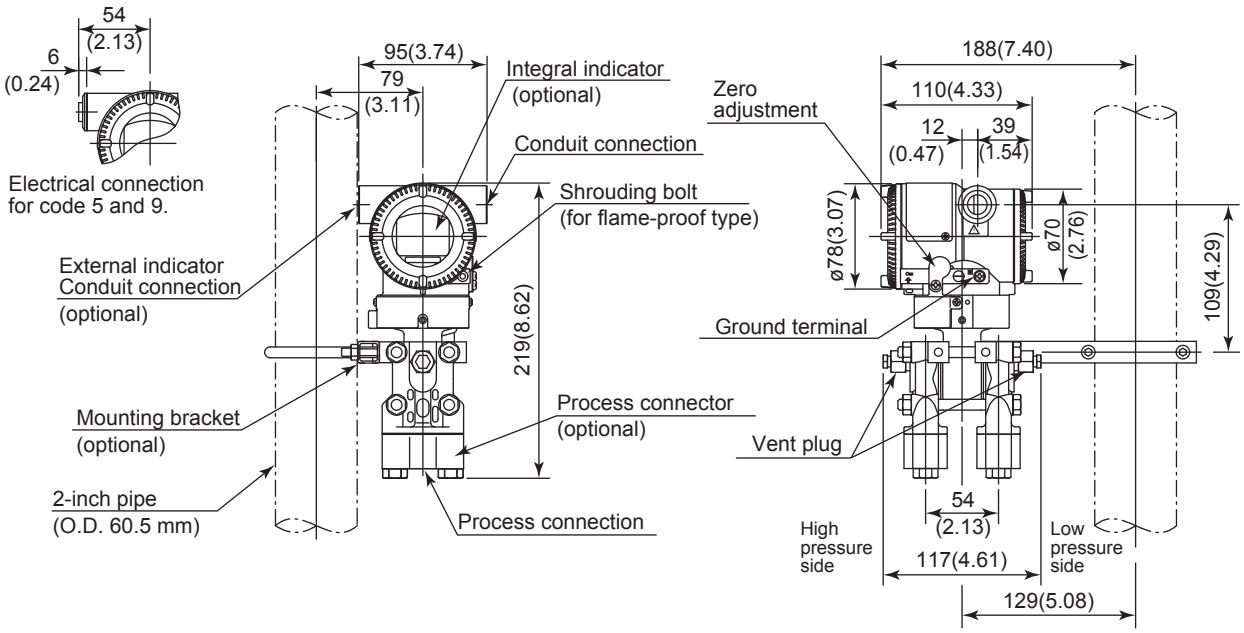

F10E.ai

● Terminal Configuration

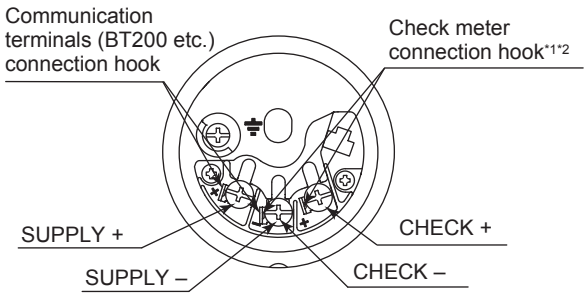

● Terminal Wiring

SUPPLY + –	Power supply and output terminal
CHECK + –	External indicator (ammeter) terminal*1*2
⏚	Ground terminal

*1: When using an external indicator or check meter, the internal resistance must be 10Ω or less.
*2: Not available for fieldbus and PROFIBUS communication types.

F11E.ai

All Rights Reserved. Copyright © 2012, Yokogawa Electric Corporation

< Ordering Information > "◊"

Specify the following when ordering

1. Model, suffix codes, and option codes
2. Calibration range and units
   1) Calibration range can be specified with range value specifications up to 5 digits (excluding any decimal point) for low or high range limits within the range of -32000 to 32000. When reverse range is designated, specify Lower Range Value(LRV) as greater than Upper Range Value(URV). When square root output mode is specified, LRV must be "0 (zero) ".
   2) Specify only one unit from the table, 'Factory setting.'
3. Select linear or square root for output mode and display mode.
   Note: If not specified, the instrument is shipped set for linear mode.
4. Display scale and units (for transmitters equipped with the integral indicator only)
   Specify either 0 to 100 % or 'Range and Unit' for engineering units scale:
   Scale range can be specified with range limit specifications up to 5 digits (excluding any decimal point) for low or high range limits within the range of -32000 to 32000. Unit display consists of 6-digit, therefore, if the specified scaling unit excluding '/' is longer than 6-characters , the first 6 characters will be displayed on the unit display.
5. HART PROTOCOL
   When output signal code is "J", specify the HART protocol revision "5" or "7".
6. TAG NO (if required)
   Specified characters (up to 16 characters) are engraved on the stainless steel tag plate fixed on the housing.
7. SOFTWARE TAG (for HART only. if required)
   Specified characters (up to 32 characters) are set as "Tag" (the first 8 characters) and "Long tag"*1 (32 characters) in the amplifier memory. Use alphanumeric capital letters.
   When the "SOFTWARE TAG" is not specified, specified "TAG NO" is set as "Tag" (the first 8 characters) and "Long tag"*1 (16 characters) in the amplifier memory.
   *1: applicable only when HART 7 is selected.
8. Other factory configurations (if required)
   Specifying option code **CA** or **CB** will allow further configuration at factory. Following are configurable items and setting range.
   [/CA : For HART communication type]
   1) Descriptor (up to 16 characters)
   2) Message (up to 30 characters)
   3) Software damping in second (0.00 to 100.00)
   [/CB : For BRAIN communication type]
   1) Software damping in second (0.00 to 100.00)

< Factory Setting > "◊"

Tag number	As specified in order
Software damping *1	'2.00 s' or as specified in order
Output mode	'Linear' unless otherwise specified in order
Calibration range lower range value	As specified in order
Calibration range upper range value	As specified in order
Calibration range unit	Selected from mmH_2O, mmH_2O(68°F), mmAq*2, mmWG*2, mmHg, Pa, hPa*2, kPa, MPa, mbar, bar, gf/cm^2, kgf/cm^2, inH_2O, inH_2O(68°F), inHg, ftH_2O, ftH_2O(68°F) or psi. (Only one unit can be specified.)
Display setting	Designated differential pressure value specified in order. (% or user scaled value.) Display mode 'Linear' or 'Square root' is also as specified in order.
Static pressure display range	'0 to 16 MPa (25 MPa*3)' absolute value. Measuring high pressure side.

*1: To specify these items at factory, option code **CA** or **CB** is required.
*2: Not available for HART protocol type.
*3: Applicable for option code **HG**.

< Material Cross Reference >

ASTM	JIS
316	SUS316
F316	SUSF316
316L	SUS316L
F316L	SUSF316L
304	SUS304
F304	SUSF304
660	SUH660
B7	SNB7
CF-8M	SCS14A

All Rights Reserved. Copyright © 2012, Yokogawa Electric Corporation
Subject to change without notice.