General Specifications

EJX310A
Absolute Pressure Transmitter

DPharp EJX™

GS 01C25D01-01EN [Style: S2]

The high performance absolute pressure transmitter EJX310A features single crystal silicon resonant sensor and is suitable to measure liquid, gas, or steam pressure. The EJX310A outputs a 4 to 20 mA DC signal corresponding to the measured pressure. It also features quick response, remote setup and monitoring via BRAIN or HART communications, and diagnostics. The multi-sensing technology provides the advanced diagnostic function to detect such abnormalities as an impulse line blockage or heat trace breakage.

FOUNDATION Fieldbus and PROFIBUS PA protocol types are also available. All EJX series models in their standard configuration, with the exception of the Fieldbus and PROFIBUS types, are certified by TÜV as complying with SIL 2 for safety requirement.

■ STANDARD SPECIFICATIONS

Refer to GS 01C25T02-01EN for Fieldbus communication type and GS 01C25T04-01EN for PROFIBUS PA communication type for the items marked with "◊."

□ SPAN AND RANGE LIMITS

Measurement Span/Range		kPa abs	psi abs (/D1)	mbar abs (/D3)	mmHg abs (/D4)
L	Span	0.5 to 10	0.15 to 2.95 inHg	5 to 100	3.8 to 75
	Range	0 to 10	0 to 2.95 inHg	0 to 100	0 to 75
M	Span	1.3 to 130	0.39 to 38 inHg	13 to 1300	9.8 to 970
	Range	0 to 130	0 to 38 inHg	0 to 1300	0 to 970
A	Span	0.0175 to 3.5 MPa	2.5 to 500	0.175 to 35 bar	0.175 to 35 kg/cm^2
	Range	0 to 3.5 MPa	0 to 500	0 to 35 bar	0 to 35 kg/cm^2
B	Span	0.08 to 16 MPa	12 to 2300	0.8 to 160 bar	0.8 to 160 kg/cm^2
	Range	0 to 16 MPa	0 to 2300	0 to 160 bar	0 to 160 kg/cm^2

□ PERFORMANCE SPECIFICATIONS

Zero-based calibrated span, linear output, wetted parts material code 'S' and silicone oil, unless otherwise mentioned.
For Fieldbus and PROFIBUS PA communication types, use calibrated range instead of span in the following specifications.

Specification Conformance

EJX series ensures specification conformance to at least ±3σ.

Reference Accuracy of Calibrated Span

(includes terminal-based linearity, hysteresis, and repeatability)

Measurement span		L
Reference accuracy	X ≤ span	±0.075% of Span
	X > span	±(0.02+0.03 URL/span)% of Span
X		5.4 kPa abs (1.6 inHg abs)
URL (upper range limit)		10 kPa abs (2.95 inHg abs)

Measurement span		M
Reference accuracy	X ≤ span	±0.04% of Span
	X > span	±(0.01+0.005 URL/span)% of Span
X		21.4 kPa abs (6.3 inHg abs)
URL (upper range limit)		130 kPa abs (38.4 inHg abs)

Measurement span		A	B
Reference accuracy	X ≤ span	±0.04% of Span	
	X > span	±(0.005+0.0035 URL/span)% of Span	
X		0.35 MPa abs (50 psia)	1.6 MPa abs (230 psia)
URL (upper range limit)		3.5 MPa abs (500 psia)	16 MPa abs (2300 psia)

Yokogawa Electric Corporation
2-9-32, Nakacho, Musashino-shi, Tokyo, 180-8750 Japan
Tel.: 81-422-52-5690 Fax.: 81-422-52-2018

GS 01C25D01-01EN
©Copyright June 2005
11th Edition Apr. 2013

Ambient Temperature Effects per 28°C (50°F) Change

Capsule	Effect
L	±(0.1% Span + 0.35% of URL)
M	±(0.04% Span + 0.035% of URL)
A and B	±(0.04% Span + 0.012% of URL)

Stability
±0.2 % of URL per 10 years

Power Supply Effects(Output signal code D, E and J)
±0.005 % per Volt (from 21.6 to 32 V DC, 350Ω)

Vibration Effects
Amplifier housing code 1 and 3:
Less than 0.1% of URL when tested per the requirements of IEC60770-1 field or pipeline with high vibration level (10-60 Hz, 0.21 mm peak to peak displacement/60-2000 Hz 3 g)
Amplifier housing code 2:
Less than ±0.1% of URL when tested per the requirements of IEC60770-1 field with general application or pipeline with low vibration level (10-60 Hz 0.15mm peak to peak displacement /60-500 Hz 2g)

Mounting Position Effects
Tilting up to 90 degree will cause zero shift up to 0.5 kPa (2.0 inH_2O) which can be corrected by the zero adjustment.

Response Time (All capsules) "◊"
90 ms
When amplifier damping is set to zero and including dead time of 45 ms (nominal)

Minimum Pressure at Calibration*
L capsule: 130 Pa abs (1 mmHg abs)
M, A and B capsules: 2.7 kPa abs (20 mmHg abs)

* : If one or two of the calibration points are smaller than the above value, the above pressure is used for testing.
In case all of the calibration points are greater than the limit, only the pressure of upper range value (URV) is applied for testing.
Specifying option code /S1 with M or A capsule will lower the limit to 130 Pa abs.
/S1 is recommended for M capsule when the specified upper range value (URV) is not exceeding 3.4 kPa abs.

□ FUNCTIONAL SPECIFICATIONS

Output "◊"
Two wire 4 to 20 mA DC output with digital communications, linear or square root programmable. BRAIN or HART FSK protocol are superimposed on the 4 to 20 mA signal.
Output range: 3.6 mA to 21.6 mA
Output limits conform to NAMUR NE43 can be preset by option C2 or C3.

Failure Alarm (Output signal code D, E and J)
Output status at CPU failure and hardware error;
Up-scale: 110%, 21.6 mA DC or more (standard)
Down-scale: −5%, 3.2 mA DC or less
Analog output status at process abnormality (Option code /DG6);
The result of process abnormality detected by the advanced diagnostic function can be reflected to an analog alert status. The following three setting modes are available.

		Mode		
		Burnout	Fall back	Off
Standard		110%, 21.6mA or more	Holds to a specified value within the output range from 3.6mA to 21.6mA	Normal output
Option Code	/C1	-2.5%, 3.6mA or less		
	/C2	-1.25%, 3.8mA or less		
	/C3	103.1%, 20.5mA or more		

Damping Time Constant (1st order)
Amplifier damping time constant is adjustable from 0.00 to 100.00 s by software and added to response time.
Note: For BRAIN protocol type, when software damping is set to less than 0.5 s, communication may occasionally be unavailble during the operation, especially while output changes dynamically. The default setting of damping ensures stable communication.

Update Period "◊"
Pressure: 45 ms

Zero Adjustment Limits
Zero can be fully elevated or suppressed, within the lower and upper range limits of the capsule.

External Zero Adjustment "◊"
External zero is continuously adjustable with 0.01% incremental resolution of span. Re-range can be done locally using the digital indicator with rangesetting switch.

Integral Indicator (LCD display) "◊"
5-digit numerical display, 6-digit unit display and bar graph.
The indicator is configurable to display one or up to three of the following variables periodically.; pressure in %, scaled pressure, measured pressure.
See also "Factory Setting".

Burst Pressure Limits
69 MPa (10,000 psi)

Self Diagnostics
CPU failure, hardware failure, configuration error, process alarm for pressure or capsule temperature. User-configurable process high/low alarm for pressure is also available, and its status can be output when optional status output is specified.

All Rights Reserved. Copyright © 2005, Yokogawa Electric Corporation

Advanced Diagnostics (optional) "◊"
Applicable for Output signal code E, J and F.
- Impulse line blockage detection
  The impulse line condition can be calculated and detected by extracting the fluctuation component from the static pressure signal.
- Heat trace monitoring
  The change of the flange temperature calculated by using the two temperature sensors built in the EJX enables to detect the heat trace breakage or the abnormal temperature due to the failure.

Signal Characterizer
User-configurable 10-segment signal characterizer for 4 to 20 mA output.

Status Output (optional, output signal code D, E and J)
One transistor contact output (sink type) to output the status of user configurable high/low alarm for pressure.
Contact rating: 10.5 to 30 V DC, 120 mA DC max.
Refer to 'Terminal Configuration' and 'Wiring Example for Analog Output and Status Output.'

SIL Certification
The EJX series transmitters except Fieldbus and PROFIBUS PA communication types are certified by TÜV according to the following standards;
IEC 61508: 2000; Part1 to Part 7
Functional Safety of Electrical/electronic/ programmable electronic related systems; SIL 2 capability for single transmitter use, SIL 3 capability for dual transmitter use.

□ NORMAL OPERATING CONDITION (Optional features or approval codes may affect limits.)

Ambient Temperature Limits
−40 to 85°C (−40 to 185°F)
−30 to 80°C (−22 to 176°F) with LCD display

Process Temperature Limits
−40 to 120°C (−40 to 248°F) M, A & B capsules
−40 to 100°C (−40 to 212°F) L capsule

Ambient Humidity Limits
0 to 100% RH

Maximum Over Pressure

Capsule	Pressure
L and M	500 kPa abs (72 psia)
A	16 MPa abs (2300 psia)
B	25 MPa abs (3600 psia)

Working Pressure Limits (Silicone oil)

Maximum Pressure Limits

Capsule	Pressure
L	10 kPa abs (2.95 inHg abs)
M	130 kPa abs (38 inHg abs)
A	3.5 MPa abs (500 psia)
B	16 MPa abs (2300 psia)

Minimum Pressure Limit
See graph below

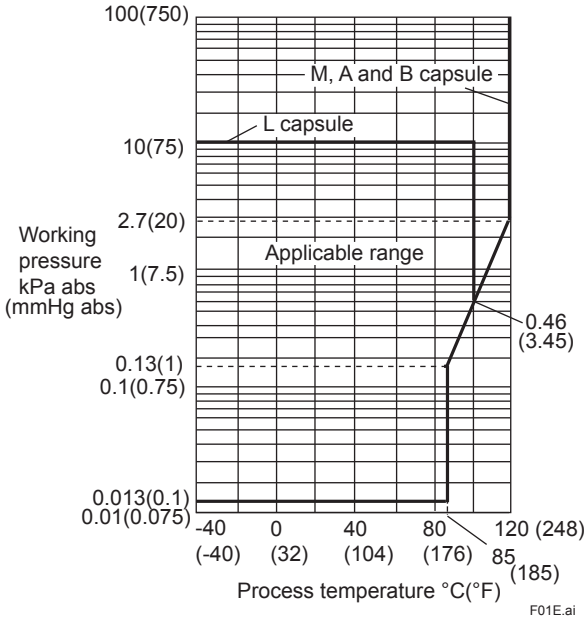

Figure 1. Working Pressure and Process Temperature

Supply & Load Requirements
(Output signal code D and E. Optional features or approval codes may affect electrical requirements.)
With 24 V DC supply, up to a 550Ω load can be used. See graph below.

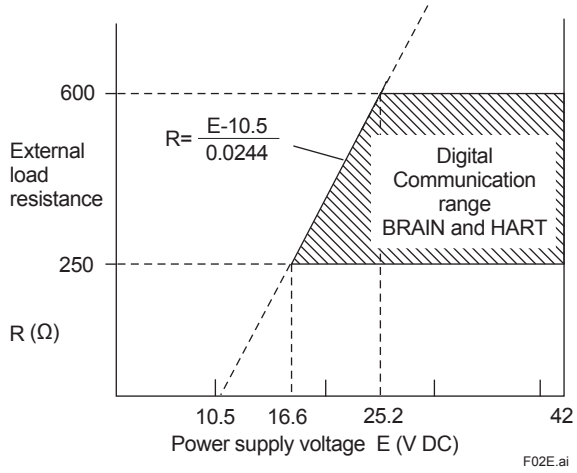

Figure 2. Relationship Between Power Supply Voltage and External Load Resistance

All Rights Reserved. Copyright © 2005, Yokogawa Electric Corporation

Supply Voltage "◊"
10.5 to 42 V DC for general use and flameproof type.
10.5 to 32 V DC for lightning protector (option code /A.)
10.5 to 30 V DC for intrinsically safe, type n, or non-incendive.
Minimum voltage limited at 16.6 V DC for digital communications, BRAIN and HART

Load (Output signal code D, E and J)
0 to 1290Ω for operation
250 to 600Ω for digital communication

Communication Requirements "◊"
(Approval codes may affect electrical requirements.)

BRAIN

Communication Distance
Up to 2 km (1.25 miles) when using CEV polyethylene-insulated PVC-sheathed cables. Communication distance varies depending on type of cable used.

Load Capacitance
0.22 μF or less

Load Inductance
3.3 mH or less

Input Impedance of communicating device
10 kΩ or more at 2.4 kHz.

EMC Conformity Standards CE , N200
EN61326-1 Class A, Table2 (For use in industrial locations)
EN61326-2-3
EN61326-2-5 (for PROFIBUS only)

Safety Requirement Standards
EN61010-1
- Altitude of installation site: Max. 2,000 m above sea level
- Installation category: I
- Pollution degree: 2
- Indoor/Outdoor use

□ PHYSICAL SPECIFICATIONS

Wetted Parts Materials

Diaphragm, Cover Flange, Process Connector, Capsule Gasket, and Vent/Drain Plug
Refer to "MODEL AND SUFFIX CODES."

Process Connector Gasket
PTFE Teflon
Fluorinated rubber for option code N2 and N3

Non-wetted Parts Materials

Bolting
B7 carbon steel, 316L SST or 660 SST

Housing
Low copper cast aluminum alloy with polyurethane, mint-green paint (Munsell 5.6BG 3.3/2.9 or its equivalent), or ASTM CF-8M Stainless Steel

Degrees of Protection
IP66/IP67, NEMA TYPE 4X

Cover O-rings
Buna-N, fluoro-rubber (optional)

Name plate and tag
316 SST

Fill Fluid
Silicone, Fluorinated oil (optional)

Weight
[Installation code 7, 8, and 9]
2.8 kg (6.2 lb) without integral indicator, mounting bracket, and process connector.
Add 1.5 kg (3.3 lb) for Amplifier housing code 2.

Connections
Refer to "MODEL AND SUFFIX CODES."
Process connection of cover flange: IEC61518

< Related Instruments>
Power Distributor: Refer to GS 01B04T01-02E or GS 01B04T02-02E
BRAIN TERMINAL: Refer to GS 01C00A11-00E

< Reference >
1. DPharp EJX, FieldMate; Trademarks of Yokogawa Electric Corporation.
2. Teflon; Trademark of E.I. DuPont de Nemours & Co.
3. Hastelloy; Trademark of Haynes International Inc.
4. HART; Trademark of the HART Communication Foundation.
5. FOUNDATION Fieldbus; Tradmark of Fieldbus Foundation.
6. PROFIBUS; Registered trademark of Profibus Nutzerorganisation e.v., Karlsruhe, Germany.

Other company names and product names used in this material are registered trademarks or trademarks of their respective owners.

All Rights Reserved. Copyright © 2005, Yokogawa Electric Corporation

■ MODEL AND SUFFIX CODES

Model	Suffix Codes	Description
EJX310A	. . . . .	Absolute pressure transmitter
Output signal	**-D**	4 to 20 mA DC with digital communication (BRAIN protocol)
	-E	4 to 20 mA DC with digital communication (HART 5 protocol)
	-J	4 to 20 mA DC with digital communication (HART 5 / HART 7 protocol) (Refer to GS 01C25T01-01EN)
	-F	Digital communication (FOUNDATION Fieldbus protocol, refer to GS 01C25T02-01EN)
	-G	Digital communication (PROFIBUS PA protocol, refer to GS 01C25T04-01EN)
Measurement span (capsule)	**L**	0.5 to 10 kPa abs (0.15 to 2.95 inHg abs)
	M	1.3 to 130 kPa abs (0.39 to 38 inHg abs)
	A	0.0175 to 3.5 MPa abs (2.5 to 500 psia)
	B	0.08 to 16 MPa abs (12 to 2300 psia)
Wetted parts material *1	**S**	Refer to "Wetted Parts Material" Table.
Process connections	**0**	without process connector (Rc1/4 female on the cover flanges)
	1	with Rc1/4 female process connector
	2	with Rc1/2 female process connector
	3	with 1/4 NPT female process connector
	4	with 1/2 NPT female process connector
	► **5**	without process connector (1/4 NPT female on the cover flanges)
Bolts and nuts materia	**J**	B7 carbon steel
	G	316L SST
	C	660 SST
Installation	**-3**	Vertical piping, right side high pressure, and process connection down side
	-7	Vertical piping, left side high pressure, and process connection down side
	-8	Horizontal piping and right side high pressure
	► **-9**	Horizontal piping and left side high pressure
	-B	Bottom Process Connection, left side high pressure:
	-U	Universal flange
Amplifier housing	**1**	Cast aluminum alloy
	3	Cast aluminum alloy with corrosion resistance properties *2
	2	ASTM CF-8M stainless steel *3 *2
Electrical connection	**0**	G1/2 female, one electrical connection without blind plugs
	► **2**	1/2 NPT female, two electrical connections without blind plugs
	4	M20 female, two electrical connections without blind plugs
	5	G1/2 female, two electrical connections and a blind plug *4
	7	1/2 NPT female, two electrical connections and a blind plug *4
	9	M20 female, two electrical connections and a blind plug *4
	A	G1/2 female, two electrical connections and a 316 SST blind plug
	C	1/2 NPT female, two electrical connections and a 316 SST blind plug
	D	M20 female, two electrical connections and a 316 SST blind plug
Integral indicator	**D**	Digital indicator *5
	E	Digital indicator with the range setting switch *6
	► **N**	(None)
Mounting bracket	► **B**	304 SST 2-inch pipe mounting, flat type (for horizontal piping)
	D	304 SST 2-inch pipe mounting, L type (for vertical piping)
	J	316 SST 2-inch pipe mounting, flat type (for horizontal piping)
	K	316 SST 2-inch pipe mounting, L type (for vertical piping)
	M	316 SST 2-inch pipe mounting (for bottom process connection type)
	N	(None)
Optional Codes		☐/ Optional specification

The "►" marks indicate the most typical selection for each specification.

*1: ⚠ Users must consider the characteristics of selected wetted parts material and influence of process fluids. Specifying inappropriate materials has the potential to cause serious damage to human body and plant facilities resulted from an unexpected leak of the corrosive process fluids.

*2: Not applicable for electrical connection code 0, 5, 7, 9 and A. Content rate of copper in the material is 0.03% or less and content rate of iron is 0.15% or less.

*3: Not applicable for electrical connection code 0, 5, 7 and 9.

*4: Material of a blind plug is aluminum alloy or 304 SST.

*5: Not applicable for output signal code G.

*6: Not applicable for output signal code F.

All Rights Reserved. Copyright © 2005, Yokogawa Electric Corporation

Table. Wetted Parts Materials

Wetted parts material code	Cover flange and process connector	Capsule	Capsule gasket	Drain/Vent plug
S #	ASTM CF-8M *1	Hastelloy C-276 *2 (Diaphragm) F316L SST (Others)	Teflon-coated 316L SST	316 SST

*1: Cast version of 316 SST. Equivalent to SCS14A.
*2: Hastelloy C-276 or ASTM N10276.
The '#' marks indicate the construction materials conform to NACE material recommendations per MR0175/ISO15156.
Please refer to the latest standards for details. Selected materials also conform to NACE MR0103.

■ OPTIONAL SPECIFICATIONS (For Explosion Protected type) "◊"

Item	Description	Code
Factory Mutual (FM)	FM Explosionproof Approval *1 Applicable Standard: FM3600, FM3615, FM3810, ANSI/NEMA 250 Explosionproof for Class I, Division 1, Groups B, C and D, Dust-ignitionproof for Class II/III, Division 1, Groups E, F and G, in Hazardous locations, indoors and outdoors (NEMA TYPE 4X) "FACTORY SEALED, CONDUIT SEAL NOT REQUIRED." Temperature class: T6, Amb. Temp.: –40 to 60°C (–40 to 140°F)	**FF1**
	FM Intrinsically safe Approval *1*2 Applicable Standard: FM3600, FM3610, FM3611, FM3810 Intrinsically Safe for Class I, Division 1, Groups A, B, C & D, Class II, Division 1, Groups E, F & G and Class III, Division 1, Class I, Zone 0, in Hazardous Locations, AEx ia IIC Nonincendive for Class I, Division 2, Groups A, B, C & D, Class II, Division. 2, Groups F & G, Class I, Zone 2, Group IIC, in Hazardous Locations Enclosure: "NEMA TYPE 4X", Temp. Class: T4, Amb. Temp.: –60 to 60°C (–75 to 140°F) Intrinsically Safe Apparatus Parameters [Groups A, B, C, D, E, F and G] Vmax=30 V, Imax=200 mA, Pmax=1 W, Ci=6 nF, Li=0 μH [Groups C, D, E, F and G] Vmax=30 V, Imax=225 mA, Pmax=1 W, Ci=6 nF, Li=0 μH	**FS1**
	Combined FF1 and FS1 *1*2	**FU1**
ATEX	ATEX Flameproof Approval *1 Applicable Standard: EN 60079-0:2009, EN 60079-1:2007, EN 60079-31:2009 Certificate: KEMA 07ATEX0109 X II 2G, 2D Ex d IIC T6...T4 Gb, Ex tb IIIC T85°C Db IP6X Degree of protection: IP66/IP67 Amb. Temp. (Tamb) for gas-proof : T4; –50 to 75°C (–58 to 167°F), T5; –50 to 80°C (–58 to 176°F), T6; –50 to 75°C (–58 to 167°F) Max. process Temp. for gas-proof (Tp): T4; 120°C (248°F), T5; 100°C (212°F), T6; 85°C (185°F) Max. surface Temp. for dust-proof: T85°C (Tamb: –30 to 75°C, Tp: 85°C) *3	**KF22**
	ATEX Intrinsically safe Approval *1*2 Applicable Standard: EN 60079-0:2009, EN 60079-11:2007, EN 60079-11:2012, EN 60079-26:2007, EN 61241-11:2006 Certificate: DEKRA 11ATEX0228 X II 1G, 2D Ex ia IIC T4 Ga, Ex ia IIIC T85°C T100°C T120°C Db Degree of protection: IP66/IP67 Amb. Temp. (Tamb) for EPL Ga: –50 to 60°C (–58 to 140°F) Maximum Process Temp. (Tp) for EPL Ga:120°C Electrical data: Ui=30 V, Ii=200 mA, Pi=0.9 W, Ci=27.6 nF, Li=0 μH Amb. Temp. for EPL Db: –30 to 60°C *3 Max. surface Temp. for EPL Db: T85°C (Tp: 80°C), T100°C (Tp: 100°C), T120°C (Tp: 120°C)	**KS21**
	Combined KF22, KS21 and ATEX Intrinsically safe Ex ic *1*2 [ATEX Intrinsically safe Ex ic] Applicable Standard: EN 60079-0:2009, EN 60079-0:2012, EN 60079-11:2012 II 3G Ex ic IIC T4 Gc, Amb. Temp.: –30 to 60°C (–22 to 140°F) *3 Ui=30 V, Ci=27.6 nF, Li=0 μH	**KU22**

All Rights Reserved. Copyright © 2005, Yokogawa Electric Corporation

Item	Description	Code
Canadian Standards Association (CSA)	CSA Explosionproof Approval *1 Certificate: 2014354 Applicable Standard: C22.2 No.0, C22.2 No.0.4, C22.2 No.0.5, C22.2 No.25, C22.2 No.30, C22.2 No.94, C22.2 No.60079-0, C22.2 No.60079-1, C22.2 No.61010-1 Explosion-proof for Class I, Groups B, C and D. Dustignition-proof for Class II/III, Groups E, F and G. When installed in Division 2, “SEAL NOT REQUIRED” Enclosure: NEMA TYPE 4X, Temp. Code: T6...T4 Ex d IIC T6...T4 Enclosure: IP66/IP67 Max.Process Temp.: T4;120°C(248°F), T5;100°C(212°F), T6; 85°C(185°F) Amb.Temp.: –50 to 75°C(–58 to 167°F) for T4, –50 to 80°C(–58 to 176°F) for T5, –50 to 75°C(–58 to 167°F) for T6 *3 Process Sealing Certification Dual Seal Certified by CSA to the requirement of ANSI/ISA 12.27.01 No additional sealing required Primary seal failure annunciation: at the zero adjustment screw	**CF1**
	CSA Intrinsically safe Approval *1*2 Certificate: 1606623 [For CSA C22.2] Applicable Standard: C22.2 No.0, C22.2 No.0.4, C22.2 No.25, C22.2 No.94, C22.2 No.157, C22.2 No.213, C22.2 No.61010-1, C22.2 No.60079-0 Intrinsically Safe for Class I, Division 1, Groups A, B, C & D, Class II, Division 1, Groups E, F & G, Class III, Division 1, Nonincendive for Class I, Division 2, Groups A, B, C & D, Class II, Division 2, Groups F & G, Class III, Division 1 Enclosure: NEMA TYPE 4X, Temp. Code: T4 Amb. Temp.: –50 to 60°C(–58 to 140°F) *3 Electrical Parameters: [Intrinsically Safe] Vmax=30V, Imax=200mA, Pmax=0.9W, Ci=10nF, Li=0 μH [Nonincendive] Vmax=30V, Ci=10nF, Li=0 μH [For CSA E60079] Applicable Standard: CAN/CSA E60079-11, CAN/CSA E60079-15, IEC 60529:2001 Ex ia IIC T4, Ex nL IIC T4 Enclosure: IP66/IP67 Amb. Temp.: –50 to 60°C(–58 to 140°F) *3, Max. Process Temp.: 120°C(248°F) Electrical Parameters: [Ex ia] Ui=30V, Ii=200mA, Pi=0.9W, Ci=10nF, Li=0 μH [Ex nL] Ui=30V, Ci=10nF, Li=0 μH Process Sealing Certification Dual Seal Certified by CSA to the requirement of ANSI/ISA 12.27.01 No additional sealing required Primary seal failure annunciation: at the zero adjustment screw	**CS1**
	Combined CF1 and CS1 *1*2	**CU1**
IECEx Scheme	IECEx Flameproof Approval *1 Applicable Standard: IEC 60079-0:2004, IEC60079-1:2003 Certificate: IECEx CSA 07.0008 Flameproof for Zone 1, Ex d IIC T6...T4 Enclosure: IP66/IP67 Max.Process Temp.: T4;120°C(248°F), T5;100°C(212°F), T6; 85°C(185°F) Amb.Temp.: –50 to 75°C(–58 to 167°F) for T4, –50 to 80°C(–58 to 176°F) for T5, –50 to 75°C(–58 to 167°F) for T6	**SF2**
	IECEx Intrinsically safe, type n and Flameproof Approval *1*2 Intrinsically safe and type n Applicable Standard: IEC 60079-0:2000, IEC 60079-11:1999, IEC 60079-15:2001 Certificate: IECEx CSA 05.0005 Ex ia IIC T4, Ex nL IIC T4 Enclosure: IP66/IP67 Amb. Temp.: –50 to 60°C(–58 to 140°F), Max. Process Temp.: 120°C(248°F) Electrical Parameters: [Ex ia] Ui=30V, Ii=200mA, Pi=0.9W, Ci=10nF, Li=0 μH [Ex nL] Ui=30V,Ci=10nF, Li=0 μH Flameproof Applicable Standard: IEC 60079-0:2004, IEC60079-1:2003 Certificate: IECEx CSA 07.0008 Flameproof for Zone 1, Ex d IIC T6...T4 Enclosure: IP66/IP67 Max.Process Temp.: T4;120°C(248°F), T5;100°C(212°F), T6; 85°C(185°F) Amb.Temp.: –50 to 75°C(–58 to 167°F) for T4, –50 to 80°C(–58 to 176°F) for T5, –50 to 75°C(–58 to 167°F) for T6	**SU2**
Combination of Approval	Combination of KU22, FU1 and CU1 *1*2	**V1U1**

*1: Applicable for Electrical connection code 2, 4, 7, 9, C and D.
*2: Not applicable for option code /AL.
*3: Lower limit of ambient temperature is –15°C (5°F) when /HE is specified.

All Rights Reserved. Copyright © 2005, Yokogawa Electric Corporation

■ OPTIONAL SPECIFICATIONS

Item		Description		Code
Painting	Color change	Amplifier cover only*1		P□
		Amplifier cover and terminal cover, Munsell 7.5 R4/14		PR
	Coating change	Anti-corrosion coating*1*2		X2
316 SST exterior parts		316 SST zero-adjustment screw and setscrews*3		HC
Fluoro-rubber O-ring		All O-rings of amplifier housing. Lower limit of ambient temperature: –15°C (5°F)		HE
Lightning protector		Transmitter power supply voltage: 10.5 to 32 V DC (10.5 to 30 V DC for intrinsically safe type.) Allowable current: Max. 6000 A (1×40 μs), Repeating 1000 A (1×40 μs) 100 times Applicable Standards: IEC 61000-4-4, IEC 61000-4-5		A
Status output*4		Transistor output (sink type) Contact rating: 10.5 to 30 V DC, 120 mA DC(max) Low level: 0 to 2 V DC		AL
Oil-prohibited use*5		Degrease cleansing treatment		K1
		Degrease cleansing treatment with fluorinated oilfilled capsule. Operating temperature −20 to 80°C (−4 to 176°F)		K2
Oil-prohibited use with dehydrating treatment*5		Degrease cleansing and dehydrating treatment		K5
		Degrease cleansing and dehydrating treatment with fluorinated oilfilled capsule. Operating temperature −20 to 80°C (−4 to 176°F)		K6
Capsule fill fluid		Flourinated oil filled in capsule Operating temperature −20 to 80°C (−4 to 176°F)		K3
Calibration units*6		P calibration (psi unit)	(See Table for Span and Range Limits.)	D1
		bar calibration (bar unit)		D3
		M calibration (kgf/cm^2 unit)		D4
Long vent*7		Total length: 119 mm (standard: 34 mm); Total length when combining with Optional code K1, K2, K5, and K6: 130 mm. Material: 316SST.		U1
Gold-plated capsule gasket *11		Gold-plated 316L SST capsule gasket. Without drain and vent plugs.		GS
Gold-plated diaphragm		Surface of isolating diaphragms are gold plated, effective for hydrogen permeation.		A1
Output limits and failure option*8		Output status at CPU failure and hardware error. When combining with Optional code F1, output signal is −5%, 3.2 mA DC or less.		C1
		NAMUR NE43 Compliant Output signal limits: 3.8 mA to 20.5 mA	Failure alarm down-scale: Output status at CPU failure and hardware error is −5%, 3.2 mA DC or less.	C2
			Failure alarm up-scale: Output status at CPU failure and hardware error is 110%, 21.6 mA or more.	C3
130 Pa abs (1 mmHg abs) Calibration *12		Minimum input pressure: 130 Pa abs(1 mmHg abs) at range calibrating testing		S1
Body option*9 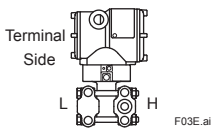		Without drain and vent plugs		N1
		N1 and Process connection, based on IEC61518 with female thread on both sides of cover flange, with blind kidney flanges on back		N2
		N2, and Material certificate for cover flange, diaphragm, capsule body, and blind kidney flange		N3
Wired tag plate		316 SST tag plate wired onto transmitter		N4
Data configuration at factory*10		Data configuration for HART communication type	Software damping, Descriptor, Message	CA
		Data configuration for BRAIN communication type	Software damping	CB
Advanced diagnostics*13		Multi-sensing process monitoring • Impulse line blockage detection *14 • Heat trace monitoring		DG6
Material certificate*15		Cover flange *17		M01
		Cover flange, Process connector *18		M11
Pressure test/ Leak test certificate*16		Test Pressure: 50 kPa (200 inH$_2$O)*19	Nitrogen(N$_2$) Gas*22 Retention time: one minute	T04
		Test Pressure: 3.5MPa (500 psi)*20		T01
		Test Pressure: 16 MPa (2300 psi)*21		T12

All Rights Reserved. Copyright © 2005, Yokogawa Electric Corporation

*1: Not applicable for amplifier housing code 2 and 3.
*2: Not applicable with color change option.
*3: 316 or 316L SST. The specification is included in amplifier code 2.
*4: When this option code is specified, check terminals are not available. Not applicable for output signal code F, and G.
*5: Applicable for wetted parts material code S.
*6: The unit of MWP (Max. working pressure) on the name plate of a housing is the same unit as specified by option code D1, D3, and D4.
*7: Applicable for vertical impulse piping type (Installation code 7) Long vent material is 316 SST.
*8: Applicable for output signal code D, E and J. The hardware error indicates faulty amplifier or capsule.
*9: Applicable for wetted parts material code S, process connection code 3, 4, and 5; Installation code 9; and mounting bracket code N. Process connection faces on the other side of zero adjustment screw.
*10: Also see 'Ordering Instructions'.
*11: Applicable for wetted parts material code S; process connection code 0 and 5; and installation code 8 and 9. Not applicable for option code U1, N2, N3 and M11. No PTFE is used for wetted parts.
*12: Applicable for Capsule code M and A with upper range value smaller than 53.3 kPa (400 mmHg abs) .
If not specified, minimum input pressure for calibration testing will be 2.7 kPa abs (20 mmHg abs) even if the smaller range value is specified for customer's range.
*13: Applicable only for output signal code E and J.
*14: The change of pressure fluctuation is monitored and then detects the impulse line blockage.
See TI 01C25A31-01E for detailed technical information required for using this function.
*15: Material traceability certification per EN 10204 3.1B.
*16: The unit on the certificate is always Pa unit regardless of selection of option code D1, D3 or D4.
*17: Applicable for Process connections code 0 and 5.
*18: Applicable for Process connections code 1, 2, 3, and 4.
*19: Applicable for capsule code M and L.
*20: Applicable for capsule code A.
*21: Applicable for capsule code B.
*22: Pure nitrogen gas is used for oil-prohibited use (option codes K1, K2, K5, and K6.)

All Rights Reserved. Copyright © 2005, Yokogawa Electric Corporation

■ DIMENSIONS

Unit: mm (approx.inch)

- **Vertical Impulse Piping Type (INSTALLATION CODE '7')**
  (For code '3', refer to the notes below.)

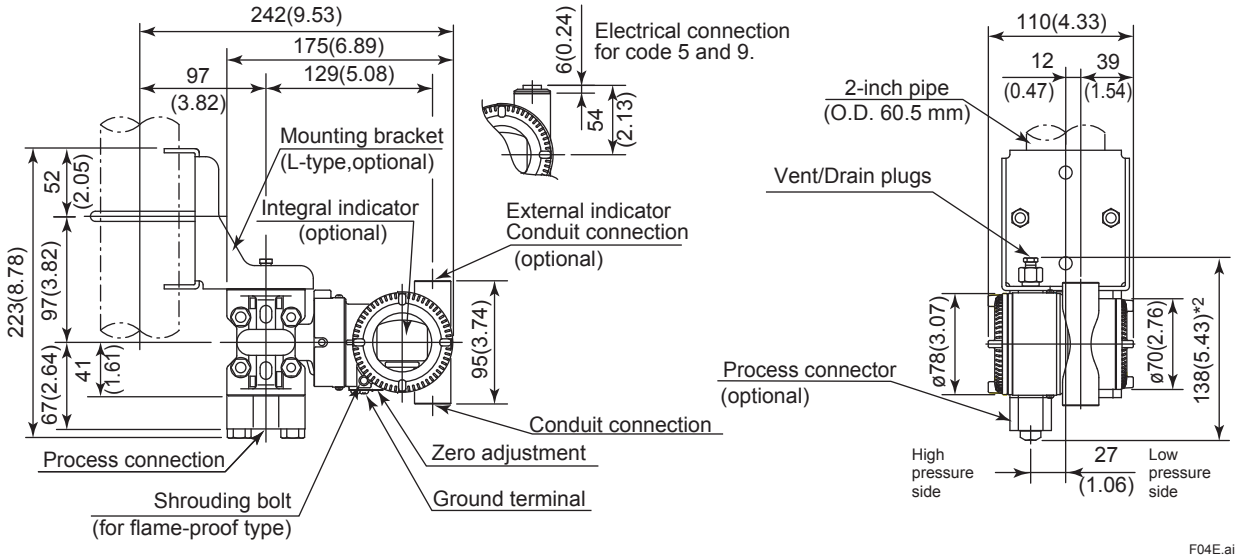

- **Horizontal Impulse Piping Type (INSTALLATION CODE '9')**
  (For CODE '8', refer to the notes below.)

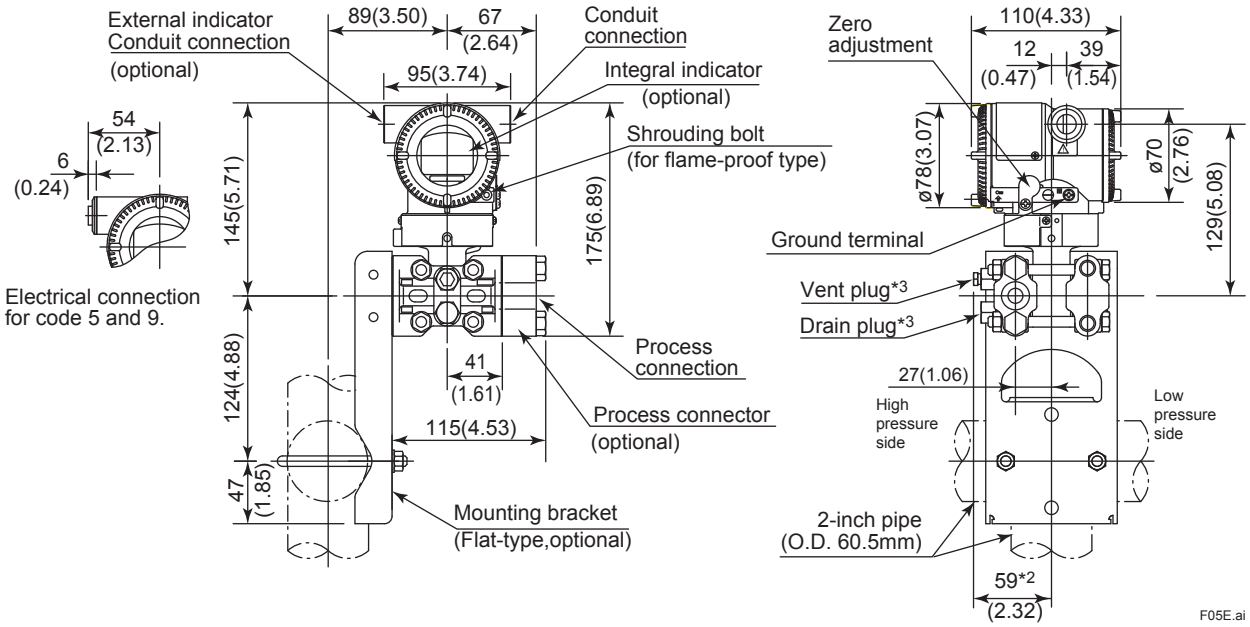

*1: When Installation code 3 or 8 is selected, high and low pressure side on above figure are reversed. (i.e. High pressure side is on the right side.)
* 2: When option code K1, K2, K5 or K6 is secified, add 15mm(0.59 inch) to the value in the figure.
* 3: Not available when option code GS is selected.

All Rights Reserved. Copyright © 2005, Yokogawa Electric Corporation

Unit: mm (approx.inch)

● Universal Flange (INSTALLATION CODE 'U')

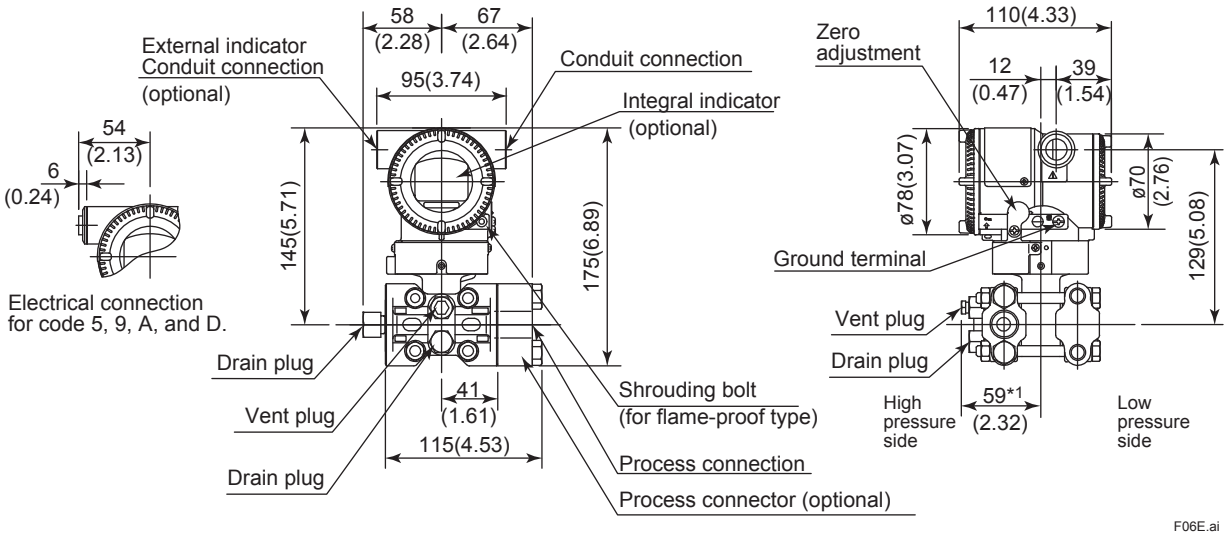

*1: When Option code K1, K2, K5, or K6 is selected, add 15 mm(0.59 inch) to the value.

● Bottom Process Connection Type (INSTALLATION CODE 'B')

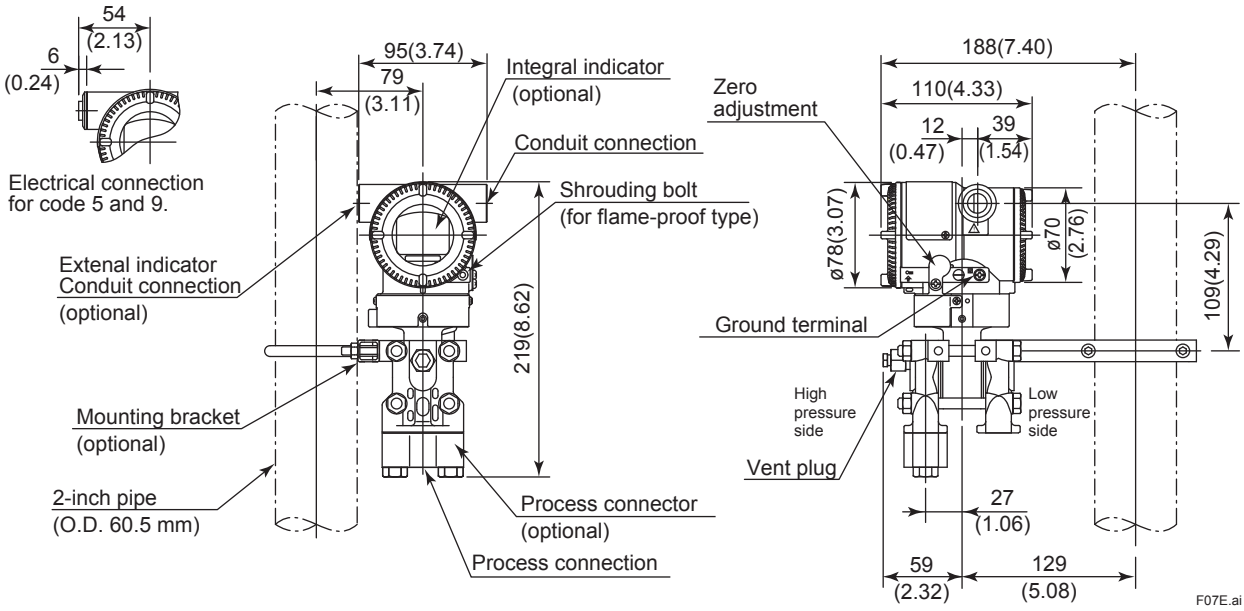

All Rights Reserved. Copyright © 2005, Yokogawa Electric Corporation

● Terminal Configuration

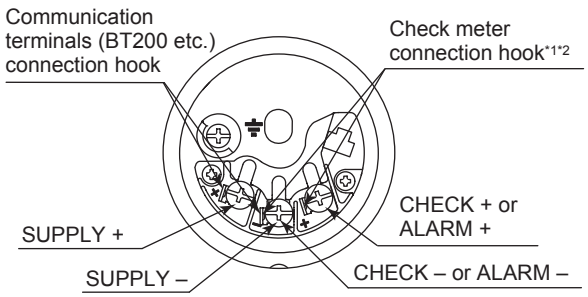

● Terminal Wiring

SUPPLY	+ –	Power supply and output terminal
CHECK or ALARM	+ –	External indicator (ammeter) terminal*1*2 or Status contact output terminal*2 (when /AL is specified)
⏚		Ground terminal

*1: When using an external indicator or check meter, the internal resistance must be 10Ω or less. A check meter or indicator cannot be connected when /AL option is specified.
*2: Not available for fieldbus and PROFIBUS communication types.

F08E.ai

● Wiring Example for Analog Output and Status Output

Connection	Description
Analog output	EJX electrical terminal 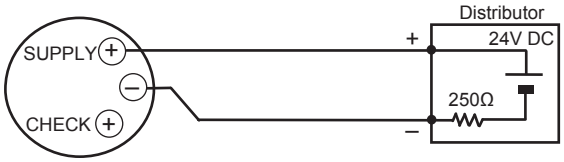
Analog and status output (when /AL is specified) If shield cable is not used, communication is not possible.	EJX electrical terminal 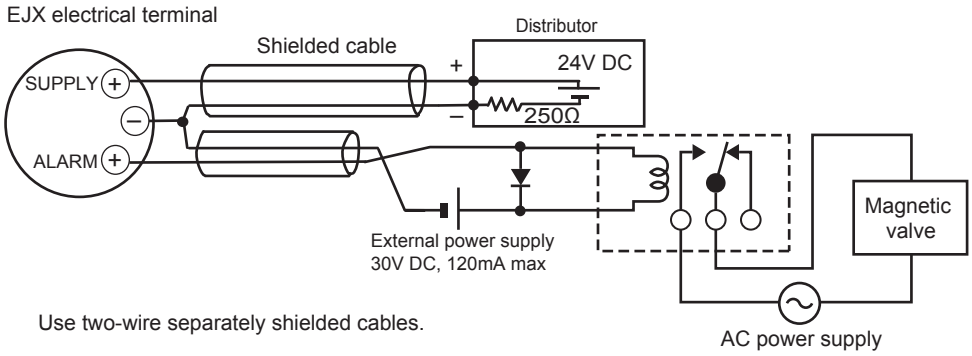 Use two-wire separately shielded cables.

F09E.ai

All Rights Reserved. Copyright © 2005, Yokogawa Electric Corporation

< Ordering Information > "◊"

Specify the following when ordering

For output signal code **–J**, refer to GS 01C25T01-01EN.

1. Model, suffix codes, and option codes
2. Calibration range and units:
   1) Calibration range can be specified with range value specifications up to 5 digits (excluding any decimal point) for low or high range limits within the range of -32000 to 32000. When reverse range is designated, specify Lower Range Value(LRV) as greater than Upper Range Value(URV).
   2) Specify only one unit from the table, 'Factory setting.'
3. Display scale and units (for transmitters equipped with an integral indicator only)
   Specify either 0 to 100% or engineering unit scale and 'Range and Unit' for engineering units scale: Scale range can be specified with range limit specifications up to 5 digits (excluding any decimal point) for low or high range limits within the range of -32000 to 32000. Unit display consists of 6-digit, therefore, if specified unit excluding '/' is longer than 6 characters, the first 6 characters will be displayed on the unit display.
4. Tag Number (if required)
   For BRAIN communication type, specify upto 16 letters. The specified letters will be written in the amplifier memory and engraved on the tag plate. For HART communication type, specify software tag (up to 8 letters) to be written on the amplifier memory and Tag number(up to 16 letters) to be engraved on the tag plate seperately.
5. Other factory configurations (if required)
   Specifying option code **CA** or **CB** will allow further configuration at factory. Following are configurable items and setting range.
   [/CA : For HART communication type]
   1) Descriptor (up to 16 characters)
   2) Message (up to 30 characters)
   3) Software damping in second (0.00 to 100.00)
   [/CB : For BRAIN communication type]
   1) Software damping in second (0.00 to 100.00)

< Factory Setting > "◊"

Tag number	As specified in order
Software damping *1	'2.00 s' or as specified in order
Calibration range lower range value	As specified in order
Calibration range upper range value	As specified in order
Calibration range units	Selected from torr, Pa abs *2, hPa abs *2, kPa abs, MPa abs, mbar abs, bar abs, mmH2O abs, mmH2O(68°F) abs, mmHg abs, gf/cm2 abs, kgf/cm2 abs, inH2O abs, inH2O abs(68°F), inHg abs, ftH2O abs, ftH2O abs(68°F) , atm, or psia. (Only one unit can be specified)
Display setting	Designated value specified in order. (%, or user scaled value.)

*1: To specify this item at factory, option code **CA** or **CB** is required.
*2: Not available for HART protocol type.

< Material Cross Reference >

ASTM	JIS
316	SUS316
F316	SUSF316
316L	SUS316L
F316L	SUSF316L
304	SUS304
F304	SUSF304
660	SUH660
B7	SNB7
CF-8M	SCS14A

All Rights Reserved. Copyright © 2005, Yokogawa Electric Corporation
Subject to change without notice.