General Specifications

EJX510A and EJX530A Absolute and Gauge Pressure Transmitter

DPharp EJX®

GS 01C25F01-01EN

[Style: S2]

The high performance absolute and gauge pressure transmitter EJX510A and EJX530A feature single crystal silicon resonant sensor and are suitable to measure liquid, gas, or steam pressure. EJX510A and EJX530A output a 4 to 20 mA DC signal corresponding to the measured pressure. It also features quick response, remote setup and monitoring via BRAIN or HART communications, diagnostics, and optional status output for pressure high/low alarm. The multisensing technology provides the advanced diagnostic function to detect such abnormalities as an impulse line blockage or heat trace breakage. FOUNDATION Fieldbus and PROFIBUS PA protocol types are also available.

All EJX series models in their standard configuration, with the exception of the Fieldbus and PROFIBUS types, are certified by TÜV as complying with SIL 2 for safety requirement.

■ STANDARD SPECIFICATIONS

Refer to GS 01C25T02-01EN for Fieldbus communication type and GS 01C25T04-01EN for PROFIBUS PA communication type for the items marked with "◊."

□ SPAN AND RANGE LIMITS

(For EJX510A, values are in absolute and lower range limits are 0.)

Measurement Span/Range		MPa	psi (/D1)	bar (/D3)	kg/cm² (/D4)
A	Span	8 to 200 kPa	1.16 to 29	0.08 to 2	0.08 to 2
	Range	−100 to 200 kPa	−14.5 to 29	−1 to 2	−1 to 2
B	Span	0.04 to 2	5.8 to 290	0.4 to 20	0.4 to 20
	Range	−0.1 to 2	−14.5 to 290	−1 to 20	−1 to 20
C	Span	0.2 to 10	29 to 1450	2 to 100	2 to 100
	Range	−0.1 to 10	−14.5 to 1450	−1 to 100	−1 to 100
D	Span	1 to 50	145 to 7200	10 to 500	10 to 500
	Range	−0.1 to 50	−14.5 to 7200	−1 to 500	−1 to 500

□ PERFORMANCE SPECIFICATIONS

Zero-based calibrated span, linear output, wetted parts material code 'S' and silicone oil, unless otherwise mentioned.
For Fieldbus and PROFIBUS PA communication types, use calibrated range instead of span in the following specifications.

Specification Conformance
EJX series ensures specification conformance to at least ±3σ.

Reference Accuracy of Calibrated Span
(includes the effects of terminal-based linearity, hysteresis, and repeatability)

Measurement span	Reference Accuracy	
	Span≥X	Span<X
A	±0.04% of Span	±(0.004 URL/ span)% of Span
B		±(0.005+0.0035 URL/ span)% of Span
C		
D		±(0.004 URL/ span)% of Span

Measurement span	A	B	C	D
X	20 kPa (2.9 psi)	0.2 MPa (29 psi)	1 MPa (145 psi)	5 MPa (720 psi)
URL (Upper range limit)	200 kPa (29 psi)	2 MPa (290 psi)	10 MPa (1450 psi)	50 MPa (7200 psi)

Ambient Temperature Effects per 28°C (50°F) Change
±(0.15% of Span + 0.15% of URL)

Stability (All normal operating condition)
EJX530A: ±0.1% of URL for 10 years
EJX510A: ±0.2% of URL for 10 years

Power Supply Effects
±0.005 % per Volt (from 21.6 to 32 V DC, 350Ω)

Vibration Effects
Amplifier housing code 1 and 3:
Less than 0.1% of URL when tested per the requirements of IEC60770-1 field or pipeline with high vibration level (10-60 Hz, 0.21 mm displacement/60-2000 Hz 3 g)
Amplifier housing code 2:
Less than ±0.1% of URL when tested per the requirements of IEC60770-1 field with general application or pipeline with low vibration level (10-60 Hz 0.15mm displacement /60-500 Hz 2g)

Yokogawa Electric Corporation
2-9-32, Nakacho, Musashino-shi, Tokyo, 180-8750 Japan
Tel.: 81-422-52-5690 Fax.: 81-422-52-2018
GS 01C25F01-01EN
©Copyright June 2004
18th Edition Sep. 2013

Mounting Position Effects
Rotation in diaphragm plane has no effect. Tilting up to 90 degree will cause zero shift up to 0.21 kPa (0.84 inH_2O) which can be corrected by the zero adjustment.

Response Time (All capsules) "◊"
90 ms
When software damping is set to zero and including dead time of 45 ms (nominal)

□ FUNCTIONAL SPECIFICATIONS

Output
Two wire 4 to 20 mA DC output with digital communications, linear or square root programmable. BRAIN or HART FSK protocol are superimposed on the 4 to 20 mA signal.
Output range: 3.6 mA to 21.6 mA
Output limits conforming to NAMUR NE43 can be pre-set by option code C2 or C3.

Failure Alarm (Output signal code D, E and J)
Output status at CPU failure and hardware error;
Up-scale: 110%, 21.6 mA DC or more (standard)
Down-scale: −5%, 3.2 mA DC or less
Analog output status at process abnormality (Option code /DG6);
The result of process abnormality detected by the advanced diagnostic function can be reflected to an analog alert status. The following three setting modes are available.

		Mode		
		Burnout	Fall back	Off
Standard		110%, 21.6mA or more	Holds to a specified value within the output range from 3.6mA to 21.6mA	Normal output
Option Code	/C1	-2.5%, 3.6mA or less		
	/C2	-1.25%, 3.8mA or less		
	/C3	103.1%, 20.5mA or more		

Damping Time Constant (1st order)
Amplifier's damping time constant is adjustable from 0.00 to 100.00 s by software and added to response time.
Note: For BRAIN protocol type, when the software damping is set to less than 0.5 s, communication may occasionally be unavailble during the operation, especially while output changes dynamically. The default setting of damping ensures stable communication.

Update Period "◊"
Pressure: 45 ms

Zero Adjustment Limits
Zero can be fully elevated or suppressed, within the lower and upper range limits of the capsule.

External Zero Adjustment
External zero is continuously adjustable with 0.01% incremental resolution of span. Re-range can be done locally using the digital indicator with rangesetting switch.

Integral Indicator (LCD display, optional) "◊"
5-digit numerical display, 6-digit unit display and bar graph.
The indicator is configurable to display one or up to three of the following variables periodically; pressure in %, scaled pressure, measured pressure.
See also "Factory Settings."

Burst Pressure Limits
A, B and C capsule: 30 MPa
D capsule: 132 MPa

Self Diagnostics
CPU failure, hardware failure, configuration error, process alarm for pressure or capsule temperature. User-configurable process high/low alarm for pressure is also available, and its status can be output when optional status output is specified.

Advanced Diagnostics (optional) "◊"
Applicable for Output signal code E, J and F.
- Impulse line blockage detection
  The impulse line condition can be calculated and detected by extracting the fluctuation component from the static pressure signal.
- Heat trace monitoring
  The change of the process connection temperature calculated by using the two temperature sensors built in the EJX enables to detect the heat trace breakage or the abnormal temperature due to the failure.

Signal Characterizer (Output signal code D, E and J)
User-configurable 10-segment signal characterizer for 4 to 20 mA output.

Status Output (optional, output signal code D, E and J)
One transistor contact output (sink type) to output the status of user configurable high/low alarm for pressure.
Rating: 10.5 to 30 V DC, 120 mA DC max.
Note: A check meter cannot be connected when status output option (/AL) is specified.
Refer to 'Wiring Example for Analog Output and Status Output.'

SIL Certification
EJX series transmitters except Fieldbus and PROFIBUS PA communication types are certified by TÜV in compliance with the following standards;
IEC 61508: 2000; Part1 to Part 7
Functional Safety of Electrical/electronic/ programmable electronic related systems; SIL 2 capability for single transmitter use, SIL 3 capability for dual transmitter use.

All Rights Reserved. Copyright © 2004, Yokogawa Electric Corporation

□ NORMAL OPERATING CONDITION (Optional features or approval codes may affect limits.)

Ambient Temperature Limits
−40 to 85°C (−40 to 185°F)
−30 to 80°C (−22 to 176°F) with LCD display

Process Temperature Limits
−40 to 120°C (−40 to 248°F)

Ambient Humidity Limits
0 to 100% RH

Maximum Over Pressure

	Pressure	
Capsule	**EJX510A**	**EJX530A**
A and B	4 MPa abs (580 psia)	4 MPa (580 psig)
C	20 MPa abs (2900 psia)	20 MPa (2900 psig)
D	75 MPa abs (10800 psia)	75 MPa (10800 psig)

Working Pressure Limits (Silicone oil)

Maximum Pressure Limits

	Pressure	
Capsule	**EJX510A**	**EJX530A**
A	200 kPa abs (29 psia)	200 kPa (29 psig)
B	2 MPa abs (290 psia)	2 MPa (290 psig)
C	10 MPa abs (1450 psia)	10 MPa (1450 psig)
D	50 MPa abs (7200 psia)	50 MPa (7200 psig)

Minimum Pressure Limit
See graph below

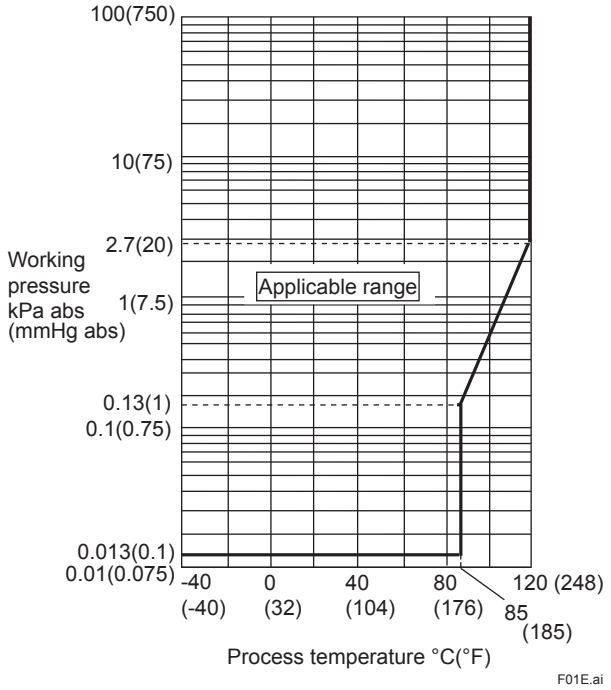

Figure 1-1. Working Pressure and Process Temperature [For EJX510A]

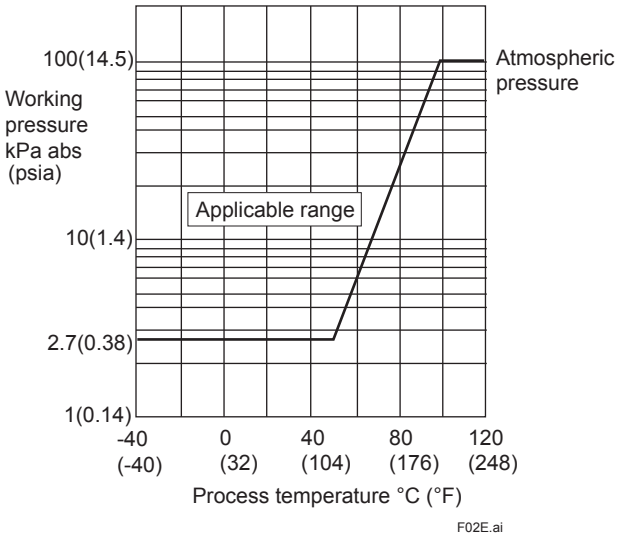

Figure 1-2. Working Pressure and Process Temperature [For EJX530A]

Supply & Load Requirements
(Output signal code D, E and J. Optional features or approval codes may affect electrical requirements.)
With 24 V DC supply, up to a 550Ω load can be used. See graph below.

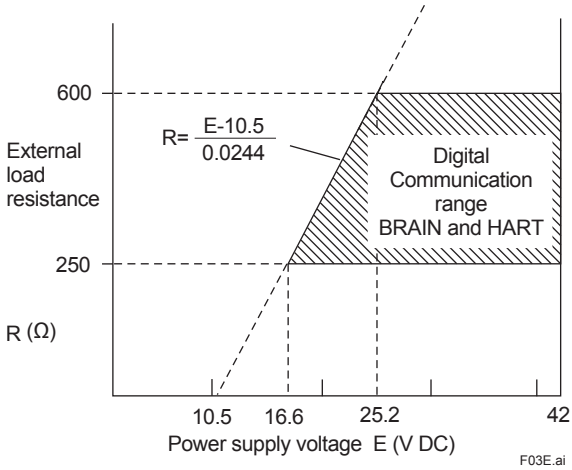

Figure 2. Relationship Between Power Supply Voltage and External Load Resistance

Supply Voltage "◊"
10.5 to 42 V DC for general use and flameproof type.
10.5 to 32 V DC for lightning protector (option code A).
10.5 to 30 V DC for intrinsically safe, type n, non-incendive or non-sparking type.
Minimum voltage limited at 16.6 V DC for digital communications, BRAIN and HART

Load (Output signal code D, E and J)
0 to 1290Ω for operation
250 to 600Ω for digital communication

All Rights Reserved. Copyright © 2004, Yokogawa Electric Corporation

Communication Requirements "◊"
(Approval codes may affect electrical requirements.)

BRAIN

Communication Distance
Up to 2 km (1.25 miles) when using CEV polyethylene-insulated PVC-sheathed cables. Communication distance varies depending on type of cable used.

Load Capacitance
0.22 μF or less

Load Inductance
3.3 mH or less

Input Impedance of communicating device
10 kΩ or more at 2.4 kHz.

EMC Conformity Standards CE , N200
EN61326-1 Class A, Table2 (For use in industrial locations)
EN61326-2-3
EN61326-2-5 (for PROFIBUS only)

European Pressure Equipment Directive 97/23/EC
Sound Engineering Practice (for all capsules)

With option code /PE3 (for D capsule)

CE 0038
Category III, Module H, Type of Equipment: Pressure Accessory-Vessel, Type of Fluid: Liquid and Gas, Group of Fluid: 1 and 2

Safety Requirement Standards
EN61010-1
- Altitude of installation site: Max. 2,000 m above sea level
- Installation category: I
- Pollution degree: 2
- Indoor/Outdoor use

□ PHYSICAL SPECIFICATIONS

Wetted Parts Materials

Diaphragm, Process Connector
Refer to "MODEL AND SUFFIX CODES."

Non-wetted Parts Materials

Housing
Low copper cast aluminum alloy with polyurethane, mint-green paint (Munsell 5.6BG 3.3/2.9 or its equivalent), or ASTM CF-8M Stainless Steel

Degrees of Protection
IP66/IP67, NEMA TYPE 4X

Pipe
Polypropylene

Cover O-rings
Buna-N, fluoro-rubber (optional)

Name plate and tag
316 SST

Fill Fluid
Silicone, Fluorinated oil (optional)

Weight
Capsule A, B and C: 1.2 kg (2.6 lb)*
Capsule D: 1.4 kg (3.1 lb)*
*: Without integral indicator and mounting bracket.
Add 1.5 kg (3.3 lb) for Amplifier housing code 2.

Connections
Refer to "MODEL AND SUFFIX CODES."

< Related Instruments>
Power Distributor: Refer to GS 01B04T01-02E or GS 01B04T02-02E
BRAIN TERMINAL: Refer to GS 01C00A11-00E

< Reference >
1. DPharp EJX® is a registered trademark of Yokogawa Electric Corporation.
2. FieldMate; Trademark of Yokogawa Electric Corporation.
3. Hastelloy; Trademark of Haynes International Inc.
4. HART; Trademark of the HART Communication Foundation.
5. FOUNDATION Fieldbus; Tradmark of Fieldbus Foundation.
6. PROFIBUS; Registered trademark of Profibus Nutzerorganisation e.v., Karlsruhe, Germany.

Other company names and product names used in this material are registered trademarks or trademarks of their respective owners.

All Rights Reserved. Copyright © 2004, Yokogawa Electric Corporation

■ MODEL AND SUFFIX CODES

Model	Suffix Codes	Description
EJX510A	. . . . .	Absolute pressure transmitter
EJX530A	. . . . .	Gauge pressure transmitter
Output signal	**-D**	4 to 20 mA DC Output with digital communication (BRAIN protocol)
	-E	4 to 20 mA DC Output with digital communication (HART 5 protocol)
	-J	4 to 20 mA DC with digital communication (HART 5 / HART 7 protocol) (Refer to GS 01C25T01-01EN)
	-F	Digital communication (FOUNDATION Fieldbus protocol, refer to GS 01C25T02-01EN)
	-G	Digital communication (PROFIBUS PA protocol, refer to GS 01C25T04-01EN)
Measurement span (capsule)	**A**.	8 to 200 kPa (1.16 to 29 psi)
	B.	0.04 to 2 MPa (5.8 to 290 psi)
	C.	0.2 to 10 MPa (29 to 1450 psi)
	D.	1 to 50 MPa (145 to 7200 psi)
Wetted parts material *2	**S**.	Process connector: 316L SST#; Diaphragm: Hastelloy C-276 *1#; Others: 316L SST#
	H.	Process connector: Hastelloy C-276 *1#; Diaphragm: Hastelloy C-276 *1#; Others: Hastelloy C-276 *1#
Process connections	**4**	1/2 NPT female
	7	1/2 NPT male
	8	G1/2 DIN 16 288 male *3
	9	M20×1.5 DIN 16 288 male *3
—	**N**.	Always N
—	**-0**	Always 0
Amplifier housing	► **1**	Cast aluminum alloy
	3	Cast aluminum alloy with corrosion resistance properties *4
	2	ASTM CF-8M stainless steel *5
Electrical connection	**0**	G1/2 female, one electrical connection without blind plugs
	► **2**	1/2 NPT female, two electrical connections without blind plugs
	4	M20 female, two electrical connections without blind plugs
	5	G1/2 female, two electrical connections with a blind plug*6
	7	1/2 NPT female, two electrical connections with a blind plug*6
	9	M20 female, two electrical connections with a blind plug*6
	A.	G1/2 female, two electrical connections and a 316 SST blind plug
	C.	1/2 NPT female, two electrical connections and a 316 SST blind plug
	D.	M20 female, two electrical connections and a 316 SST blind plug
Integral indicator	**D**.	Digital indicator *7
	E.	Digital indicator with the range setting switch *8
	► **N**.	(None)
Mounting bracket	**L**.	316 SST 2-inch pipe mounting
	► **N**.	None
Optional Codes		☐/ Optional specification

The "►" marks indicates the most typical selection for each specification. Example: EJX530A-DAS4N-012NN/☐.

*1: Hastelloy C-276 or ASTM N10276.

*2: ⚠ Users must consider the characteristics of selected wetted parts material and the influence of process fluids. The use of inappropriate materials can result in the leakage of corrosive process fluids and cause injury to personnel and/or damage to plant facilities. It is also possible that the diaphragm itself can be damaged and that material from the broken diaphragm and the fill fluid can contaminate the user's process fluids.
Be very careful with highly corrosive process fluids such as hydrochloric acid, sulfuric acid, hydrogen sulfide, sodium hypochlorite, and high-temperature steam (150°C [302°F] or above). Contact Yokogawa for detailed information of the wetted parts material.

*3: Not applicable for combination of capsule code D and wetted parts material code H. Threads are based on the withdrawn DIN 16 288.

*4: Not applicable for electrical connection code 0, 5, 7, 9 and A. Content rate of copper in the material is 0.03% or less and content rate of iron is 0.15% or less.

*5: Not applicable for electrical connection code 0, 5, 7 or 9.

*6: Material of a blind plug is aluminum alloy or 304 SST.

*7: Not applicable for output signal code G.

*8: Not applicable for output signal code F.

The '#' marks indicate the construction materials conform to NACE material recommendations per MR0175/ISO 15156. Please refer to the latest standards for details. Selected materials also conform to NACE MR0103.

All Rights Reserved. Copyright © 2004, Yokogawa Electric Corporation

■ OPTIONAL SPECIFICATIONS (For Explosion Protected type) "◊"

Item	Description	Code
Factory Mutual (FM)	FM Explosionproof Approval *1 Applicable Standard: FM3600, FM3615, FM3810, ANSI/NEMA 250 Explosionproof for Class I, Division 1, Groups B, C and D, Dust-ignitionproof for Class II/III, Division 1, Groups E, F and G, in Hazardous locations, indoors and outdoors (NEMA TYPE 4X) "FACTORY SEALED, CONDUIT SEAL NOT REQUIRED." Temperature class: T6, Amb. Temp.: –40 to 60°C (–40 to 140°F)	**FF1**
	FM Intrinsically safe Approval *1*2 Applicable Standard: FM3600, FM3610, FM3611, FM3810 Intrinsically Safe for Class I, Division 1, Groups A, B, C & D, Class II, Division 1, Groups E, F & G and Class III, Division 1, Class I, Zone 0, in Hazardous Locations, AEx ia IIC Nonincendive for Class I, Division 2, Groups A, B, C & D, Class II, Division. 2, Groups F & G, Class I, Zone 2, Group IIC, in Hazardous Locations Enclosure: "NEMA TYPE 4X", Temp. Class: T4, Amb. Temp.: –60 to 60°C (–75 to 140°F) Intrinsically Safe Apparatus Parameters [Groups A, B, C, D, E, F and G] Vmax=30 V, Imax=200 mA, Pmax=1 W, Ci=6 nF, Li=0 μH [Groups C, D, E, F and G] Vmax=30 V, Imax=225 mA, Pmax=1 W, Ci=6 nF, Li=0 μH	**FS1**
	Combined FF1 and FS1 *1*2	**FU1**
ATEX	ATEX Flameproof Approval *1 Applicable Standard: EN 60079-0:2009, EN 60079-1:2007, EN 60079-31:2009 Certificate: KEMA 07ATEX0109 X II 2G, 2D Ex d IIC T6...T4 Gb, Ex tb IIIC T85°C Db IP6X Degree of protection: IP66/IP67 Amb. Temp. (Tamb) for gas-proof : T4; –50 to 75°C (–58 to 167°F), T5; –50 to 80°C (–58 to 176°F), T6; –50 to 75°C (–58 to 167°F) Max. process Temp. for gas-proof (Tp): T4; 120°C (248°F), T5; 100°C (212°F), T6; 85°C (185°F) Max. surface Temp. for dust-proof: T85°C (Tamb: –30 to 75°C, Tp: 85°C) *3	**KF22**
	ATEX Intrinsically safe Approval *1*2 Applicable Standard: EN 60079-0:2009, EN 60079-11:2007, EN 60079-11:2012, EN 60079-26:2007, EN 61241-11:2006 Certificate: DEKRA 11ATEX0228 X II 1G, 2D Ex ia IIC T4 Ga, Ex ia IIIC T85°C T100°C T120°C Db Degree of protection: IP66/IP67 Amb. Temp. (Tamb) for EPL Ga: –50 to 60°C (–58 to 140°F) Maximum Process Temp. (Tp) for EPL Ga:120°C Electrical data: Ui=30 V, Ii=200 mA, Pi=0.9 W, Ci=27.6 nF, Li=0 μH Amb. Temp. for EPL Db: –30 to 60°C *3 Max. surface Temp. for EPL Db: T85°C (Tp: 80°C), T100°C (Tp: 100°C), T120°C (Tp: 120°C)	**KS21**
	Combined KF22, KS21 and ATEX Intrinsically safe Ex ic *1*2 [ATEX Intrinsically safe Ex ic] Applicable Standard: EN 60079-0:2009, EN 60079-0:2012, EN 60079-11:2012 II 3G Ex ic IIC T4 Gc, Amb. Temp.: –30 to 60°C (–22 to 140°F) *3 Ui=30 V, Ci=27.6 nF, Li=0 μH	**KU22**

All Rights Reserved. Copyright © 2004, Yokogawa Electric Corporation

Item	Description	Code
Canadian Standards Association (CSA)	CSA Explosionproof Approval *1 Certificate: 2014354 Applicable Standard: C22.2 No.0, C22.2 No.0.4, C22.2 No.0.5, C22.2 No.25, C22.2 No.30, C22.2 No.94, C22.2 No.60079-0, C22.2 No.60079-1, C22.2 No.61010-1 Explosion-proof for Class I, Groups B, C and D. Dustignition-proof for Class II/III, Groups E, F and G. When installed in Division 2, “SEAL NOT REQUIRED” Enclosure: NEMA TYPE 4X, Temp. Code: T6...T4 Ex d IIC T6...T4 Enclosure: IP66/IP67 Max.Process Temp.: T4;120°C(248°F), T5;100°C(212°F), T6; 85°C(185°F) Amb.Temp.: –50 to 75°C(–58 to 167°F) for T4, –50 to 80°C(–58 to 176°F) for T5, –50 to 75°C(–58 to 167°F) for T6 *3 Process Sealing Certification Dual Seal Certified by CSA to the requirement of ANSI/ISA 12.27.01 No additional sealing required Primary seal failure annunciation: at the zero adjustment screw	**CF1**
	CSA Intrinsically safe Approval *1*2 Certificate: 1606623 [For CSA C22.2] Applicable Standard: C22.2 No.0, C22.2 No.0.4, C22.2 No.25, C22.2 No.94, C22.2 No.157, C22.2 No.213, C22.2 No.61010-1, C22.2 No.60079-0 Intrinsically Safe for Class I, Division 1, Groups A, B, C & D, Class II, Division 1, Groups E, F & G, Class III, Division 1, Nonincendive for Class I, Division 2, Groups A, B, C & D, Class II, Division 2, Groups F & G, Class III, Division 1 Enclosure: NEMA TYPE 4X, Temp. Code: T4 Amb. Temp.: –50 to 60°C(–58 to 140°F) *3 Electrical Parameters: [Intrinsically Safe] Vmax=30V, Imax=200mA, Pmax=0.9W, Ci=10nF, Li=0 μH [Nonincendive] Vmax=30V, Ci=10nF, Li=0 μH [For CSA E60079] Applicable Standard: CAN/CSA E60079-11, CAN/CSA E60079-15, IEC 60529:2001 Ex ia IIC T4, Ex nL IIC T4 Enclosure: IP66/IP67 Amb. Temp.: –50 to 60°C(–58 to 140°F) *3, Max. Process Temp.: 120°C(248°F) Electrical Parameters: [Ex ia] Ui=30V, Ii=200mA, Pi=0.9W, Ci=10nF, Li=0 μH [Ex nL] Ui=30V, Ci=10nF, Li=0 μH Process Sealing Certification Dual Seal Certified by CSA to the requirement of ANSI/ISA 12.27.01 No additional sealing required Primary seal failure annunciation: at the zero adjustment screw	**CS1**
	Combined CF1 and CS1 *1*2	**CU1**
IECEx Scheme	IECEx Flameproof Approval *1 Applicable Standard: IEC 60079-0:2004, IEC60079-1:2003 Certificate: IECEx CSA 07.0008 Flameproof for Zone 1, Ex d IIC T6...T4 Enclosure: IP66/IP67 Max.Process Temp.: T4;120°C(248°F), T5;100°C(212°F), T6; 85°C(185°F) Amb.Temp.: –50 to 75°C(–58 to 167°F) for T4, –50 to 80°C(–58 to 176°F) for T5, –50 to 75°C(–58 to 167°F) for T6	**SF2**
	IECEx Intrinsically safe, type n and Flameproof Approval *1*2 Intrinsically safe and type n Applicable Standard: IEC 60079-0:2000, IEC 60079-11:1999, IEC 60079-15:2001 Certificate: IECEx CSA 05.0005 Ex ia IIC T4, Ex nL IIC T4 Enclosure: IP66/IP67 Amb. Temp.: –50 to 60°C(–58 to 140°F), Max. Process Temp.: 120°C(248°F) Electrical Parameters: [Ex ia] Ui=30V, Ii=200mA, Pi=0.9W, Ci=10nF, Li=0 μH [Ex nL] Ui=30V,Ci=10nF, Li=0 μH Flameproof Applicable Standard: IEC 60079-0:2004, IEC60079-1:2003 Certificate: IECEx CSA 07.0008 Flameproof for Zone 1, Ex d IIC T6...T4 Enclosure: IP66/IP67 Max.Process Temp.: T4;120°C(248°F), T5;100°C(212°F), T6; 85°C(185°F) Amb.Temp.: –50 to 75°C(–58 to 167°F) for T4, –50 to 80°C(–58 to 176°F) for T5, –50 to 75°C(–58 to 167°F) for T6	**SU2**
Combination of Approval	Combination of KU22, FU1 and CU1 *1*2	**V1U1**

*1: Applicable for Electrical connection code 2, 4, 7, 9, C and D.
*2: Not applicable for option code /AL.
*3: Lower limit of ambient temperature is –15°C (5°F) when /HE is specified.

All Rights Reserved. Copyright © 2004, Yokogawa Electric Corporation

■ OPTIONAL SPECIFICATIONS

Item		Description	Code
Painting	Color change	Amplifier cover only*14	P□
		Amplifier cover and terminal cover, Munsell 7.5 R4/14	PR
	Coating change	Anti-corrosion coating*1*14	X2
316 SST exterior parts		316 SST zero-adjustment screw and setscrews*16	HC
Fluoro-rubber O-ring		All O-rings of amplifier housing. Lower limit of ambient temperature: –15°C (5°F)	HE
Lightning protector		Transmitter power supply voltage: 10.5 to 32 V DC (10.5 to 30 V DC for intrinsically safe type, 9 to 32 V DC for Fieldbus communication type.) Allowable current: Max. 6000 A (1×40 μs), Repeating 1000 A (1×40 μs) 100 times Applicable Standards: IEC 61000-4-4, IEC 61000-4-5	A
Status output*2		Transistor output (sink type) Rating: 10.5 to 30 V DC, 120 mA DC (max) Low level: 0 to 2 V DC	AL
Oil-prohibited use		Degrease cleansing treatment	K1
		Degrease cleansing treatment with fluorinated oilfilled capsule. Operating temperature −20 to 80°C (−4 to 176°F)	K2
Capsule fill fluid		Flourinated oil filled in capsule Operating temperature −20 to 80°C (−4 to 176°F)	K3
Calibration units*3		P calibration (psi unit) — (See Table for Span and Range Limits.)	D1
		bar calibration (bar unit) — (See Table for Span and Range Limits.)	D3
		M calibration (kgf/cm^2 unit) — (See Table for Span and Range Limits.)	D4
Output limits and failure operation*4		Failure alarm down-scale : Output status at CPU failure and hardware error is −5%, 3.2mA DC or less.	C1
		NAMUR NE43 Compliant Output signal limits: 3.8 mA to 20.5 mA — Failure alarm down-scale: Output status at CPU failure and hardware error is −5%, 3.2 mA DC or less.	C2
		NAMUR NE43 Compliant Output signal limits: 3.8 mA to 20.5 mA — Failure alarm up-scale: Output status at CPU failure and hardware error is 110%, 21.6 mA or more.	C3
Gold-plated diaphragm *13		Surface of isolating diaphragms are gold plated, effective for hydrogen permeation.	A1
Wired tag plate		316 SST tag plate wired onto transmitter	N4
Data configuration at factory*5		Data configuration for HART communication type — Software damping, Descriptor, Message	CA
		Data configuration for BRAIN communication type — Software damping	CB
Advanced diagnostics*17		Multi-sensing process monitoring • Impulse line blockage detection *18 • Heat trace monitoring	DG6
European Pressure Equipment Directive*15		PED 97/23/EC Category: III, Module: H, Type of Equipment: Pressure Accessory-Vessel, Type of Fluid: Liquid and Gas, Group of Fluid: 1 and 2	PE3
Material certificate*6		Process Connector	M15
Pressure test/ Leak test certificate*12		Test Pressure: 200 kPa (29 psi) *7 — Nitrogen(N_2) Gas or Water*11 Retention time: one minute	T05
		Test Pressure: 2 MPa (290 psi) *8 — Nitrogen(N_2) Gas or Water*11 Retention time: one minute	T06
		Test Pressure: 10 MPa (1450 psi) *9 — Nitrogen(N_2) Gas or Water*11 Retention time: one minute	T07
		Test Pressure: 50 MPa (7200 psi) *10 — Nitrogen(N_2) Gas or Water*11 Retention time: one minute	T08

*1: Not applicable with color change option.
*2: Check/External indicator terminals cannot be used when this option code is specified.
Not applicable for output signal code F and G.
*3: The unit of MWP (Max. working pressure) on the name plate of a housing is the same unit as specified by option codes D1, D3, and D4.
*4: Applicable for output signal codes D, E and J. The hardware error indicates faulty amplifier or capsule.
*5: Also see 'Ordering Information'.
*6: Material traceability certification, per EN 10204 3.1 B.
*7: Applicable for capsule code A.
*8: Applicable for capsule code B.
*9: Applicable for capsule code C.
*10: Applicable for capsule code D.
*11: Pure nitrogen gas or pure water is used for oil-prohibited use (option codes K1 and K2).
*12: The unit on the certificate is always kPa/MPa regardless of selection of option code D1, D3 and D4.
*13: Applicable for wetted parts material code S.
*14: Not applicable for amplifier housing code 2 and 3.
*15: Applicable for measurement span code D. If compliance with category III is needed, specify this option code.
*16: 316 or 316L SST. The specification is included in amplifier code 2.
*17: Applicable only for output signal code E and J.
*18: The change of pressure fluctuation is monitored and then detects the impulse line blockage. See TI 01C25A31-01E for detailed technical information required for using this function.

All Rights Reserved. Copyright © 2004, Yokogawa Electric Corporation

■ DIMENSIONS

Unit: mm (approx.inch)

Model EJX510A and EJX530A

- **With process connections code 7**

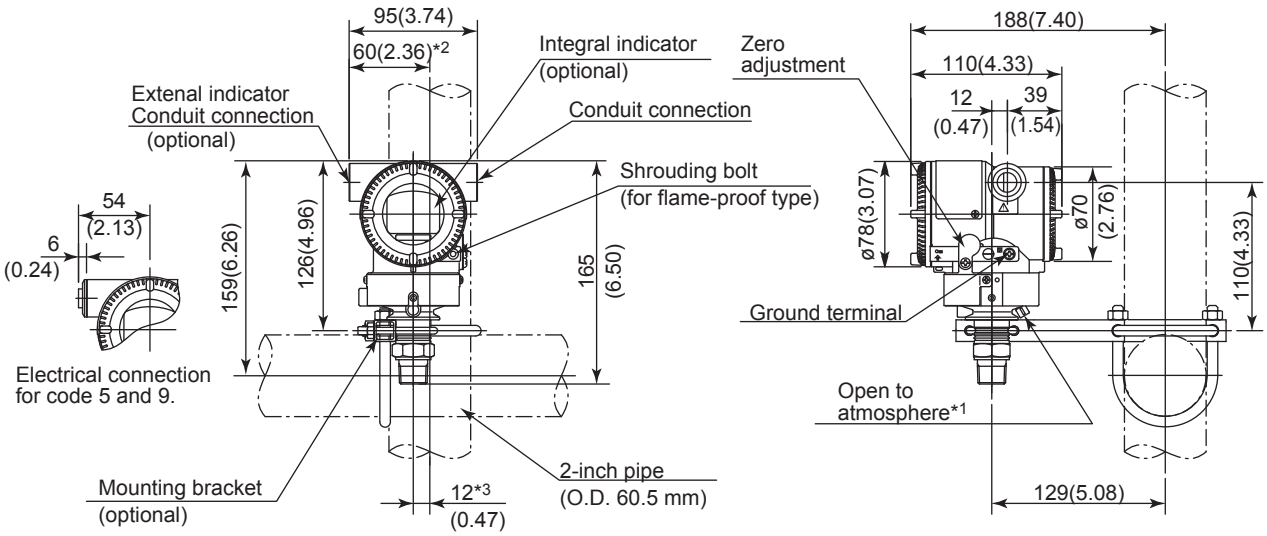

*1: Only for EJX530A whose measurement span code is A, B, or C.
*2: 58 mm (2.28 inch) for measurement span code D.
*3: 11 mm (0.43 inch) for measurement span code D.

- **With Process connections code 4**

- **With Process connections code 8 and 9**

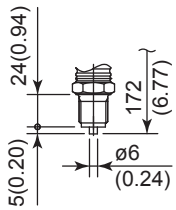

F04E.ai

- **Terminal Configuration**

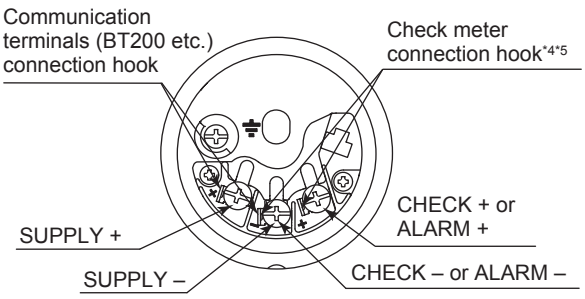

- **Terminal Wiring**

SUPPLY	+ –	Power supply and output terminal
CHECK or ALARM	+ – + –	External indicator (ammeter) terminal*4*5 or Status contact output terminal*5 (when /AL is specified)
⏚		Ground terminal

*4: When using an external indicator or check meter, the internal resistance must be 10Ω or less. A check meter or indicator cannot be connected when /AL option is specified.
*5: Not available for fieldbus and PROFIBUS communication types.

F05E.ai

All Rights Reserved. Copyright © 2004, Yokogawa Electric Corporation

● Wiring Example for Analog Output and Status Output

Connection	Description
Analog output	EJX electrical terminal 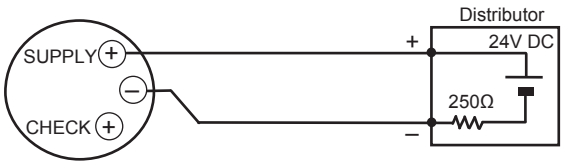
Analog and status output (when /AL is specified) If shield cable is not used, communication is not possible.	EJX electrical terminal 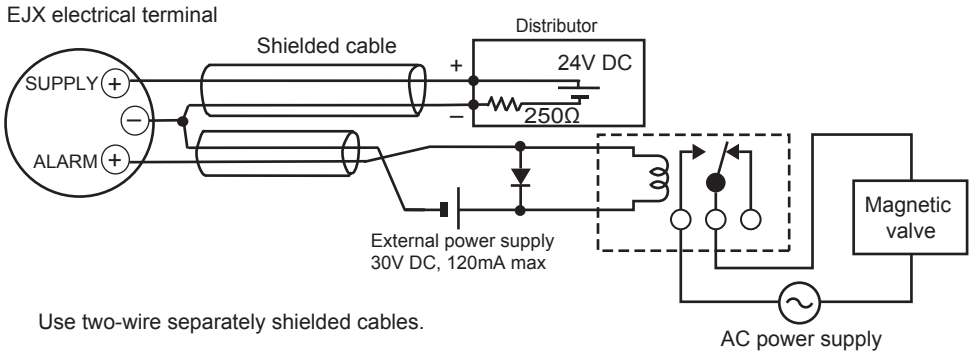 Use two-wire separately shielded cables.

F06E.ai

All Rights Reserved. Copyright © 2004, Yokogawa Electric Corporation

< Ordering Information > "◊"

Specify the following when ordering

For output signal code **–J**, refer to GS 01C25T01-01EN.

1. Model, suffix codes, and option codes
2. Calibration range and units
   1) Calibration range can be specified with range value specifications up to 5 digits (excluding any decimal point) for low or high range limits within the range of -32000 to 32000. When reverse range is designated, specify Lower Range Value (LRV) as greater than Upper Range Value (URV).
   2) Specify only one unit from the table, 'Factory Settings' when shipped.'
3. Display scale and units (for transmitters equipped with integral indicator only)
   Specify either 0 to 100 % or engineering unit scale and 'Range and Unit' for engineering units scale: Scale range can be specified with range limit specifications up to 5 digits (excluding any decimal point) for low or high range limits within the range of -32000 to 32000. The unit display consists of 6-digit, therefore, if the specified unit is longer than 7 characters excluding '/', the first 6 characters will be displayed on the unit display.
4. TAG NO (if required)
   Specified characters (up to 16 characters for BRAIN, 22 characters for HART) are engraved on the stainless steel tag plate fixed on the housing.
5. SOFTWARE TAG (for HART only. if required)
   Specified characters (up to 32 characters) are set as "Tag" (the first 8 characters) and "Long tag"*1 (32 characters) in the amplifier memory. Use alphanumeric capital letters.
   When the "SOFTWARE TAG" is not specified, specified "TAG NO" is set as "Tag" (the first 8 characters) and "Long tag"*1 (16 characters) in the amplifier memory.
   *1: applicable only when HART 7 is selected.
6. Other factory configurations (if required)
   Specifying option code **CA** or **CB** will allow further configuration at factory. Following are configurable items and setting range.
   [/CA : For HART communication type]
   1) Descriptor (up to 16 characters)
   2) Message (up to 30 characters)
   3) Software damping in second (0.00 to 100.00)
   [/CB : For BRAIN communication type]
   1) Software damping in second (0.00 to 100.00)

< Factory Setting > "◊"

Tag number	As specified in order
Software damping *1	'2.00 s' or as specified in order
Calibration range lower range value	As specified in order
Calibration range upper range value	As specified in order
Calibration range units	[EJX530A] Selected from mmH_2O, mmH_2O(68°F), mmAq*2, mmWG*2, mmHg, Pa, hPa*2, kPa, MPa, mbar, bar, gf/cm^2, kgf/cm^2, inH_2O, inH_2O(68°F), inHg, ftH_2O, ftH_2O(68°F) or psi. (Only one unit can be specified) [EJX510A] Torr, Pa abs, hPa abs*2, kPa abs, MPa abs, mbar abs, bar abs, kgf/cm^2 abs, mmH_2O abs, mmH_2O abs(68°F), mmHg abs, inH_2O abs, inH_2O abs(68°F), inHg abs, ftH_2O abs, ftH_2O abs(68°F), psia, atm.
Display setting	Designated value specified in order. (%, or user scaled value.)

*1: To specify these items at factroy, /**CA** or /**CB** option is required.
*2: Not available for HART protocol type.

< Material Cross Reference >

ASTM	JIS
grade 316	SUS316
grade 316L	SUS316L
grade 304	SUS304

All Rights Reserved. Copyright © 2004, Yokogawa Electric Corporation
Subject to change without notice.